Wirewound Rheostat/Potentiometer

FEATURES

- 25 W at 25 °C
- CCTU 05-03B (PA1)
- Vitreous - RT style
- Compliant to RoHS directive 2002/95/EC

RoHS COMPLIANT

DIMENSIONS in millimeters

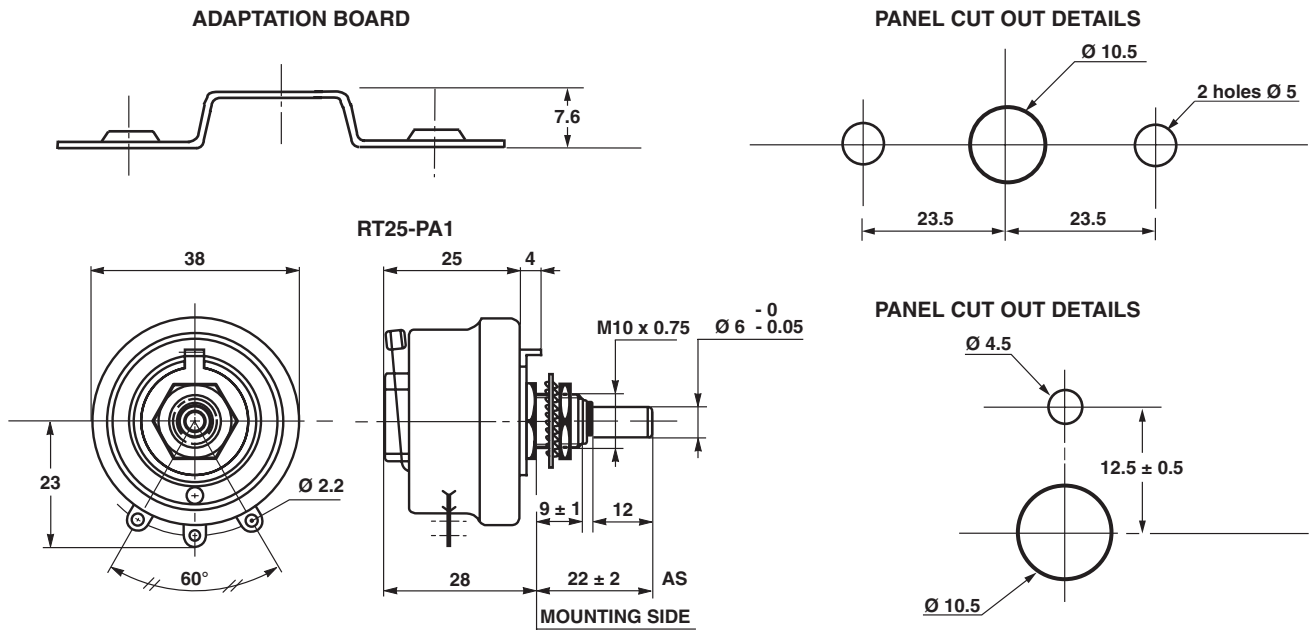

MECHANICAL SPECIFICATIONS

Mechanical Protection	Vitreous
Mechanical Travel	300° ± 5°
Operating Torque	1 Ncm to 10 Ncm
End Stop Torque	50 Ncm
Unit Weight	80 g

ENVIRONMENTAL SPECIFICATIONS

Temperature Range	- 55 °C + 320 °C
Climatic Category	CCTU 454 CEI 55/200/56

ELECTRICAL SPECIFICATIONS

Ohmic Range		1 Ω to 4.7 kΩ
Tolerance Standard		± 10 %
Power Rating		25 W at 25 °C
Variation Law	**Standard**	Linear
	On request	Sectorial winding
Dielectric Strength		1000 V_{RMS}
Insulation Resistance		10^3 MΩ (500 V_{CC})

LOCKING DEVICE

This is supplied as an option.

The available spindle length is according to the panel thickness.

Order reference: DBA6

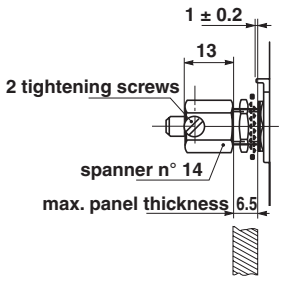

ADAPTATION BOARD

This enables 2 point mounting instead of bush mounting. The adaptation board is supplied as an option with 2 mounting screws. Consequently, the available spindle length is reduced by 9.5 mm.

PARTICULAR CHARACTERISTICS

NOMINAL RESISTANCE Ω	MAX. SERVICE VOLTAGE V	MAX. CURRENT THROUGH WIPER mA
1	5	5000
1.5	6.12	4080
2.2	7.42	3370
3.3	9.08	2750
4.7	10.8	2300
6.8	13	1920
10	15.8	1580
15	19.4	1290
22	23.5	1070
33	28.7	870
47	34.3	730
68	41.2	605
100	50	500
150	61.2	408
220	74.2	337
330	90.8	275
470	108	230
680	130	192
1K	158	158
1.5K	194	129
2.2K	235	107
3.3K	287	87
4.7K	343	73

SPINDLES

Ø mm	DISTANCE TO MOUNTING PLATE mm	SCREW DRIVER SLOT	CODE
6	22	With	ASF
	25	Without	AM
		With	AMF
	50	Without	AL
6	22	Without	AS

For any special requirement on request: spindle flats, etc. Please supply detailed drawing.

COMMAND SHAFT 29JF (OPTION)

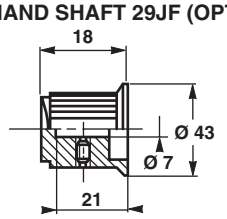

DIAL CG57 (OPTION)

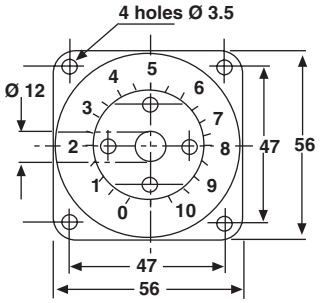

MARKING

Vishay Sfernice trademark, series, style, power rating in watts, ohmic value (in Ω or kΩ), tolerance (in %), maximum current in A, manufacturing date.

ORDERING INFORMATION

RT	025	ASF	2201	K	B	XXX
MODEL	STYLE	SPINDLE	OHMIC VALUE	TOLERANCE	PACKAGING	SPECIAL DESIGN

GLOBAL PART NUMBER INFORMATION

R	T	0	2	5	A	S	1	0	R	0	K	B

GLOBAL MODEL	SIZE	LOCKING DEVICE (OPT.)	WINDING (OPT.)	COMMAND SHAFT	OHMIC VALUE	TOLERANCE	PACKAGING	SPECIAL
RT	**025**	**D**	**BXXX** or **BXXXX** As applicable xxx(x) = Internal number	**AS** = Standard (Diam: 6 mm) **AM** **AMF** **AL** **ASF**	The three first digits are significant figures and the last digit specifies the number of zeros to follow. R designates decimal point. **2002** = 20 kΩ **4700** = 470 Ω **10R0** = 10 Ω **0R01** = 0.01 Ω	**J** = 5 % **K** = 10 %	**B** = Bulk BO10 No standard packaging: **N** = Bulk, qty. open	As applicable **Ex** = DXxx

Disclaimer

ALL PRODUCT, PRODUCT SPECIFICATIONS AND DATA ARE SUBJECT TO CHANGE WITHOUT NOTICE TO IMPROVE RELIABILITY, FUNCTION OR DESIGN OR OTHERWISE.

Vishay Intertechnology, Inc., its affiliates, agents, and employees, and all persons acting on its or their behalf (collectively, "Vishay"), disclaim any and all liability for any errors, inaccuracies or incompleteness contained in any datasheet or in any other disclosure relating to any product.

Vishay makes no warranty, representation or guarantee regarding the suitability of the products for any particular purpose or the continuing production of any product. To the maximum extent permitted by applicable law, Vishay disclaims (i) any and all liability arising out of the application or use of any product, (ii) any and all liability, including without limitation special, consequential or incidental damages, and (iii) any and all implied warranties, including warranties of fitness for particular purpose, non-infringement and merchantability.

Statements regarding the suitability of products for certain types of applications are based on Vishay's knowledge of typical requirements that are often placed on Vishay products in generic applications. Such statements are not binding statements about the suitability of products for a particular application. It is the customer's responsibility to validate that a particular product with the properties described in the product specification is suitable for use in a particular application. Parameters provided in datasheets and/or specifications may vary in different applications and performance may vary over time. All operating parameters, including typical parameters, must be validated for each customer application by the customer's technical experts. Product specifications do not expand or otherwise modify Vishay's terms and conditions of purchase, including but not limited to the warranty expressed therein.

Except as expressly indicated in writing, Vishay products are not designed for use in medical, life-saving, or life-sustaining applications or for any other application in which the failure of the Vishay product could result in personal injury or death. Customers using or selling Vishay products not expressly indicated for use in such applications do so at their own risk and agree to fully indemnify and hold Vishay and its distributors harmless from and against any and all claims, liabilities, expenses and damages arising or resulting in connection with such use or sale, including attorneys fees, even if such claim alleges that Vishay or its distributor was negligent regarding the design or manufacture of the part. Please contact authorized Vishay personnel to obtain written terms and conditions regarding products designed for such applications.

No license, express or implied, by estoppel or otherwise, to any intellectual property rights is granted by this document or by any conduct of Vishay. Product names and markings noted herein may be trademarks of their respective owners.

Material Category Policy

Vishay Intertechnology, Inc. hereby certifies that all its products that are identified as RoHS-Compliant fulfill the definitions and restrictions defined under Directive 2011/65/EU of The European Parliament and of the Council of June 8, 2011 on the restriction of the use of certain hazardous substances in electrical and electronic equipment (EEE) - recast, unless otherwise specified as non-compliant.

Please note that some Vishay documentation may still make reference to RoHS Directive 2002/95/EC. We confirm that all the products identified as being compliant to Directive 2002/95/EC conform to Directive 2011/65/EU.