THIS DRAWING IS UNPUBLISHED. RELEASED FOR PUBLICATION 2006
© COPYRIGHT 2006 - ALL RIGHTS RESERVED.

LOC	DIST
A1	-

REVISIONS

P	LTR	DESCRIPTION	DATE	DWN	APVD
	A3	DIMENSION ADDED; VIEW REMOVED [E-08-016663]	30JUN2008	MW	JH
	A4	0.4±0.1 WAS (0.4) [E-09-001929]	27JAN2009	MW	JH
	B	DIODE PLATING CHANGED [E-09-005299]	13MAER2009	MW	JH
	C	E-12-001793	21DEC2011	SK	RW

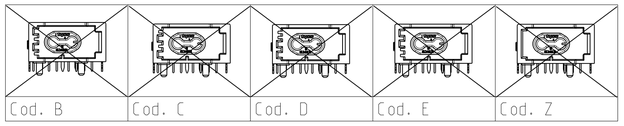

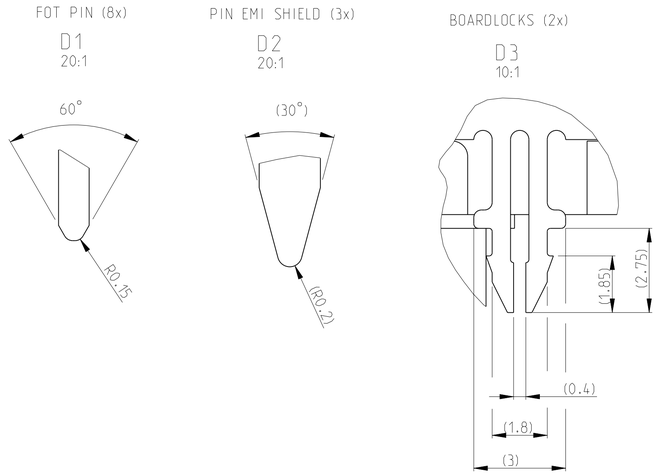

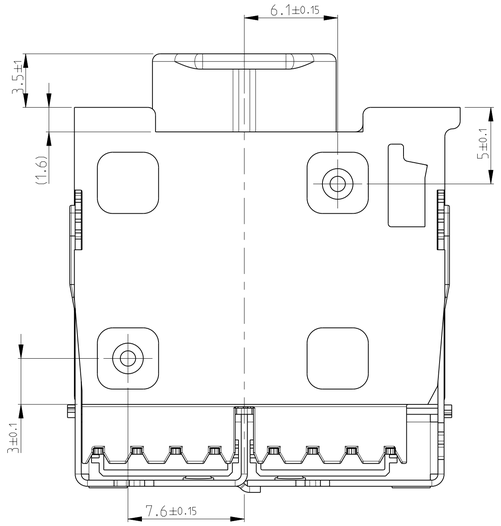

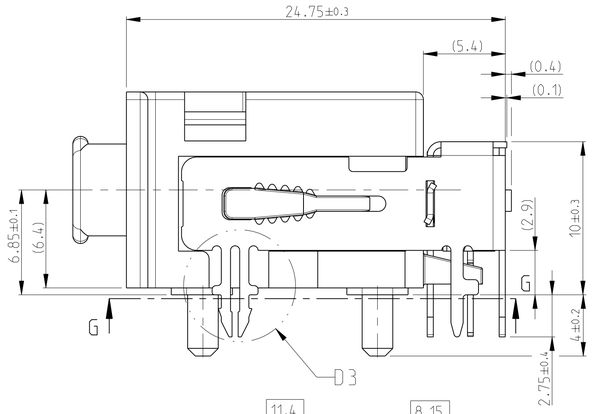

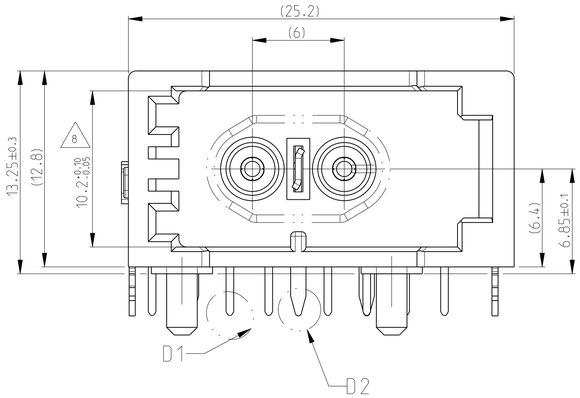

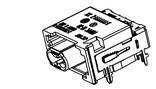

Anlieferzustand
DELIVERY CONDITION

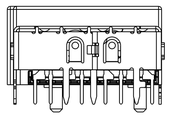

2:1

2-1670571-1 wie dargestellt (Kodierung A)
2-1670571-1 AS SHOWN (CODING A)

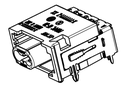

1:1

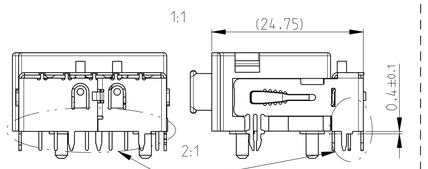

1 Verpackung: siehe Verpackungsanweisung V-1670571
PACKAGING: SEE PACKAGING INSTRUCTION V-1670571

2 100% optische Daempfungspruefung, Bus Signal Pruefung
100% OPTICAL ATTENUATION TEST OF CONTINUITY,
BUS SIGNAL TEST

3 Bezugspin
REFERENCE PIN

4 Massgebend ist der deutsche Text
ONLY THE GERMAN LANGUAGE SHALL BE BINDING

5 Alle Masse in () nur als Info
ALL DIMENSION IN () ONLY AS INFO

6 Pinlayout von Loetseite aus gesehen.
Angabe entsprechen den Form- und Lagetoleranzen der Pins.
(Layout ist entsprechend auszulegen)
PIN LAYOUT SHOWN FROM SOLDERING SIDE PCB.
MEASURES AND TOLERANCES ACCORDING TO PINS
LAYOUT HAS TO BE ADAPTED

7 Ø 1.8 mm Bohrung fuer Boardlocks
Ø 1.8 MM HOLE FOR BOARDLOCKS

8 Steckersystem gemaess Schnittstelle C-114-18361-1 inklusive Kodierungen
CONNECTOR ACCORDING TO C-114-18361-1 INCLUDING CODINGS

(C) 9 Assy PN, Produktionsdatum, Revision und FOT Typ auf Header gedruckt
oder laser graviert Schrift: Hoehe 1.6mm.
Position bleibt dem Hersteller ueberlassen.
ASSY PN, DATE CODE, REVISON AND FOT TYP PRINTED
OR LASER ENGRAVED ON HEADER CHAR: HIGH 1.6MM.
POSITION IS LEFT TO THE MANUFACTURER

10 Gewicht ohne Staubschutzkappe
WEIGHT WITHOUT PROTECTION COVER

11 PN 1-1670571-1 Kodierung A wie gezeichnet
PN 1-1670571-1 CODING A AS SHOWN

12 Passend zu Gegenstecker bsp. 1418862
SUITABLE TO MATING PART E.G. 1418862

13 Markierung ZZZ= AV3 fuer Diodentyp ODIN
MARKING ZZZ= AV3 FOR FOT TYP ODIN

14 Pos.6 Staubschutzkappe (natur) Handhabungshilfe-nicht Teil
des endgueltigen Produktes
POS.6 PROTECTION COVER (NATURE) HANDLING AID-NOT PART
OF FINAL PRODUCT

15 Fot-Pins Rx / Tx
FOT-PINS Rx / Tx

16 EMI-Schirmblech Pins
EMI-SHIELD PINS

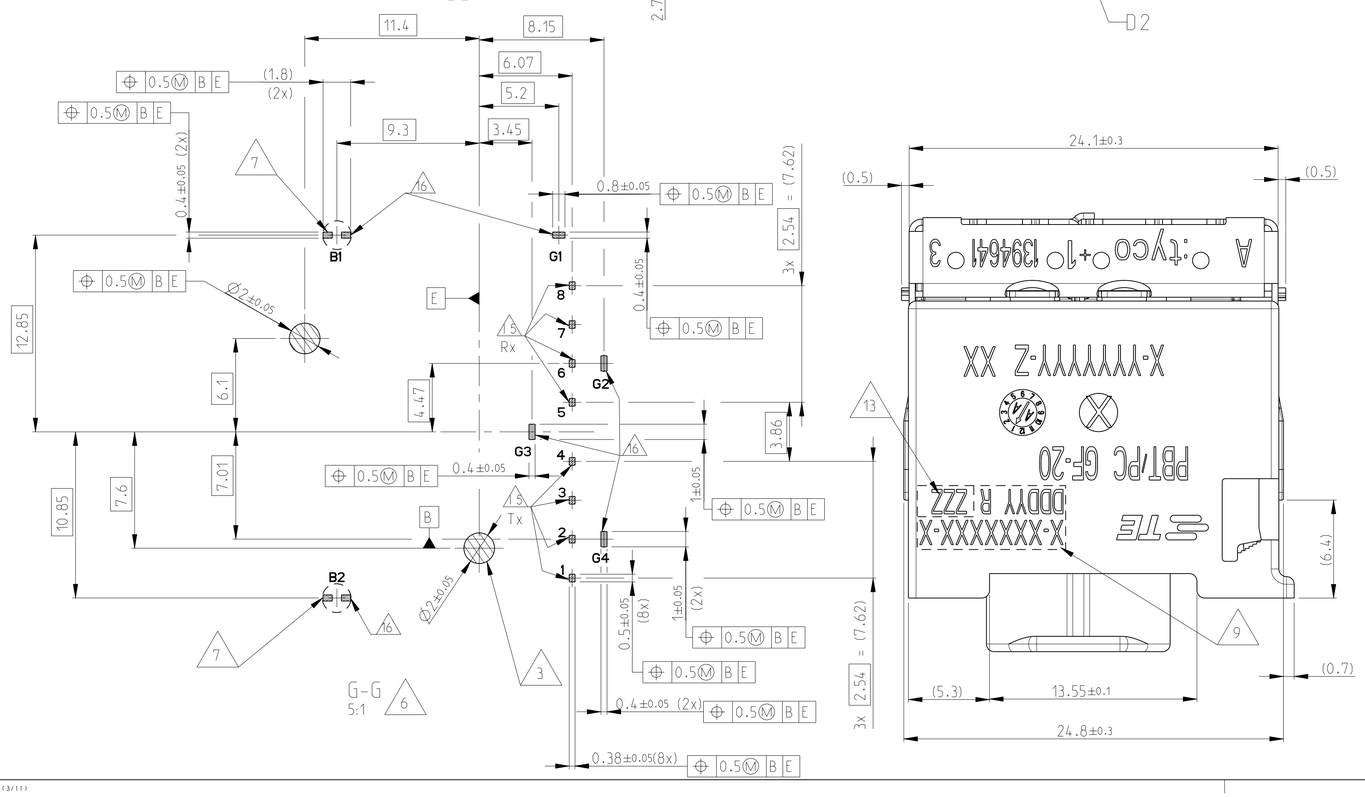

Nicht fuer Neu - Projekte! Ersatz: x-2141577-1, oder 1-2141103-1
NOT FOR NEW PROJECTS! REPLACEMENTS: x-2141577-1, OR 1-2141103-1

PN	REV.	CODING	POS.	DESCRIPTION	Qty.	MATERIAL/COLOUR	WEIGHT (G)
2-1670571-1	C (C)	A	6	14	1	PP-MF20 / NATURE	0.7
			5	POLYMER OPTICAL FIBRE	2	PC / clear and PA12 / black	6.5 (10)
			4	RECEIVER ODIN 4.02	1	Plating: Au >0.01µm	
			3	TRANSMITTER ODIN 4.02	1	Plating: Au >0.01µm	
			2	EMI SHIELDING MICRO (EXTENDED)	1	CuSn 4 / plating: 0.8 - 3.0µm Ni 2.0 - 5.0µm Sn (SOLDER PINS)	
			1	2pos HEADER HOUSING COD A	1	PBT/PC GF20 / BLACK	
1-1670571-1	C (C)	A	6	14	1	PP-MF20 / NATURE	0.7
			5	POLYMER OPTICAL FIBRE	2	PC / clear and PA12 / black	6.1 (10)
			4	RECEIVER ODIN 4.02	1	Plating: Au >0.01µm	
			3	TRANSMITTER ODIN 4.02	1	Plating: Au >0.01µm	
			2	EMI SHIELDING MICRO	1	CuSn 4 / plating: 0.8 - 3.0µm Ni 2.0 - 5.0µm Sn (SOLDER PINS)	
			1	2pos HEADER HOUSING COD A	1	PBT/PC GF20 / BLACK	

THIS DRAWING IS A CONTROLLED DOCUMENT.

DIMENSIONS: mm

TOLERANCES UNLESS OTHERWISE SPECIFIED:
0 PLC ±
1 PLC ±
2 PLC ±
3 PLC ±
4 PLC ±
ANGLES ±1°

MATERIAL -
FINISH -

DWN Walter 21SEP2006
CHK Hahn 22SEP2006
APVD -
PRODUCT SPEC 108-94042
APPLICATION SPEC 114-18783
WEIGHT SEE TABLE

TE Connectivity

NAME
MICROPIGTAIL ASSEMBLY
Micropigtail Zusammenbau
ODIN / POF

SIZE	CAGE CODE	DRAWING NO	RESTRICTED TO
A1	00779	C-1670571	-

CUSTOMER DRAWING
SCALE 5:1 SHEET 1 OF 1 REV C

4805 (3/11)
Pro/ENGINEER DRAWING