THIS DRAWING IS UNPUBLISHED. RELEASED FOR PUBLICATION –,– .
© COPYRIGHT – By – ALL RIGHTS RESERVED.

LOC	DIST
BD	0

REVISIONS

P	LTR	DESCRIPTION	DATE	DWN	APVD
	N1	REVISED PER ECO-11-004820	11MAR11	RK	HMR

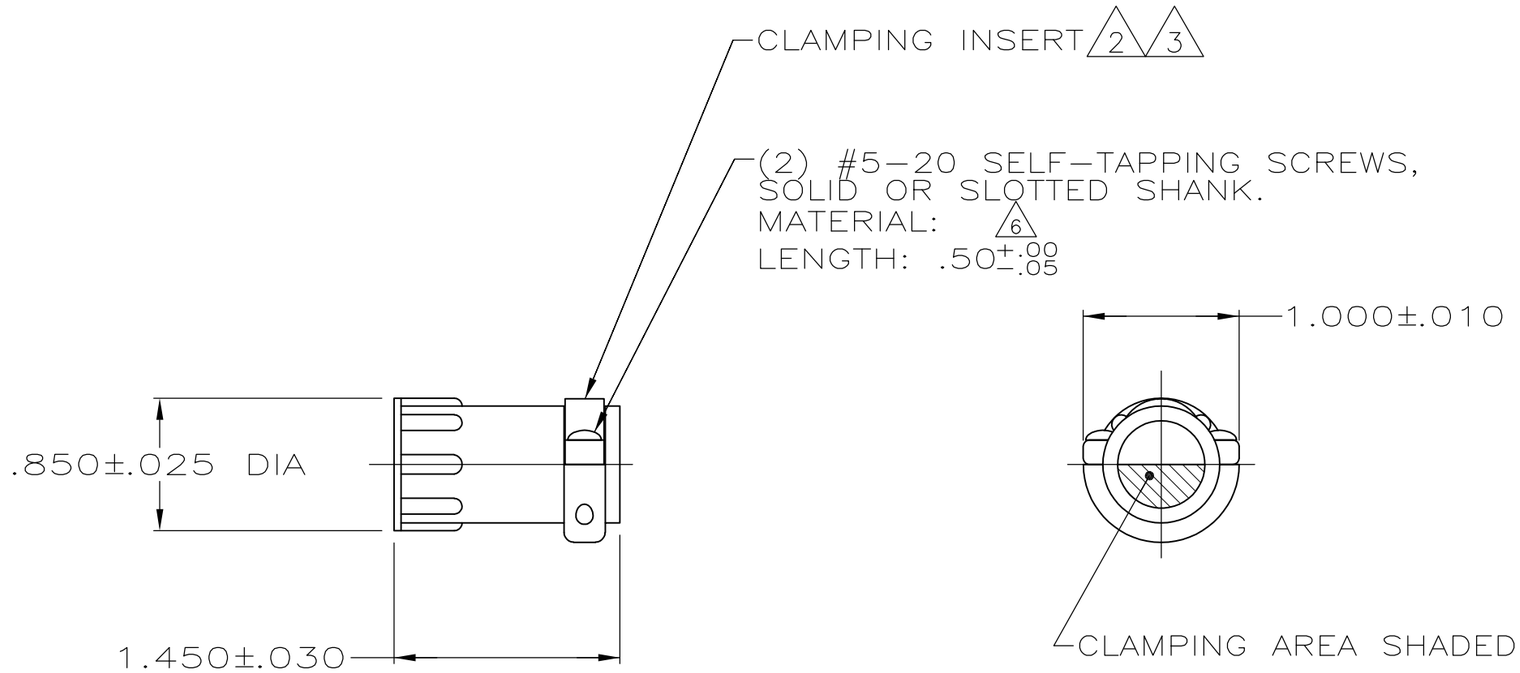

1 PARTS PACKAGED UNASSEMBLED.

2 CABLE CLAMPING AREA ADJUSTABLE FROM .010 TO .161 SQ IN BY REVERSING CLAMPING INSERTS. (2 INSERTS SUPPLIED, –1 AND –2 ONLY)

3 CABLE CLAMPING AREA ADJUSTABLE FROM .010 TO .161 SQ IN BY CHANGING CLAMPING INSERTS. (4 INSERTS SUPPLIED, –3 ONLY)

4 .453 MAXIMUM CABLE OUTSIDE DIAMETER.

5 BULK PACKAGED KITS TO BE ORDERED IN MULTIPLES OF 200 ONLY.

6 STEEL, ZINC PLATE WITH NON-HEXAVALENT CHROMATE.

	PACKAGING	PART NUMBER
6	5 BULK	206358-6
6	INDIVIDUAL	206358-5
6	INDIVIDUAL	206358-4
OBSOLETE	~~5 BULK~~	~~206358-3~~
6 SUPERSEDED BY 206358-6	5 BULK	206358-2
6 SUPERSEDED BY 206358-5	INDIVIDUAL	206358-1

THIS DRAWING IS A CONTROLLED DOCUMENT.

DIMENSIONS: INCHES

TOLERANCES UNLESS OTHERWISE SPECIFIED:
0 PLC ± –
1 PLC ± –
2 PLC ± –
3 PLC ± –
4 PLC ± –
ANGLES ± –

MATERIAL: THERMOPLASTIC

FINISH: –

DWN A GRAFF 4/23/91
CHK W.G.LENKER 7-23-92
APVD – –
PRODUCT SPEC 108-10024
APPLICATION SPEC –
WEIGHT –

CUSTOMER DRAWING

TE Connectivity

NAME: CABLE CLAMP KIT, LARGE, SHELL SIZE 11, CPC

SIZE	CAGE CODE	DRAWING NO	RESTRICTED TO
A3	00779	C-206358	–

SCALE NTS | SHEET 1 OF 1 | REV N1