Type: CDH74

◆ Product Description

- 7.3×8.0mm Max.(L×W), 5.2mm Max. Height.
- Inductance range: 10～470μH.
- Rated current range: 0.33～2.75A.
- In addition to the standard versions of inductors shown here, custom inductors are available to meet your exact requirements.

◆ Feature

- Magnetically unshielded construction.
- Storage temperature range: -40℃～+100℃.
- Operating temperature range: -40℃～+100℃ (Including coil's self temperature rise).
- Ideally used in Notebook PC, Projector, LCD TV, Game machine, STB etc as DC-DC converter inductors.
- Qualification to AEC-Q200.
- RoHS compliance and Halogen Free.

◆ Dimensions (mm)

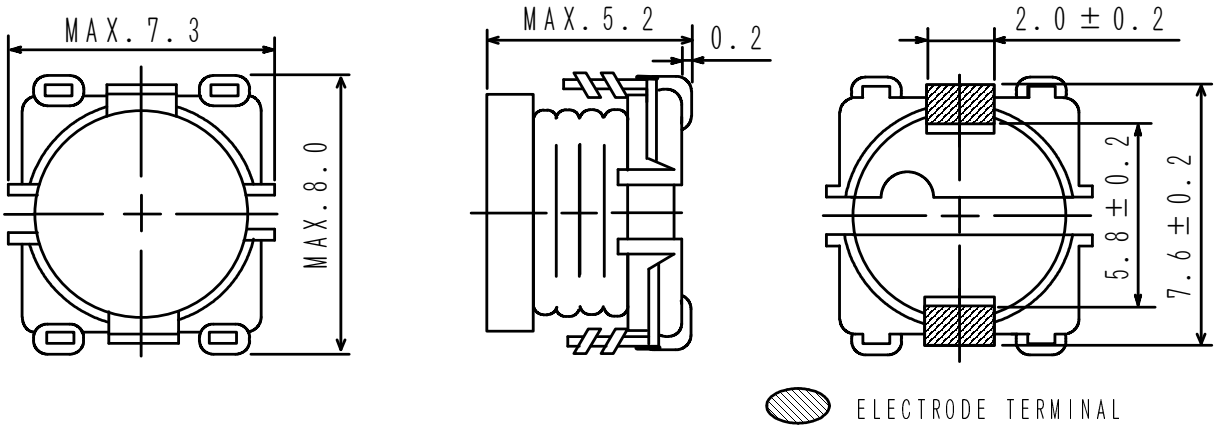

◆ Land Pattern (mm)

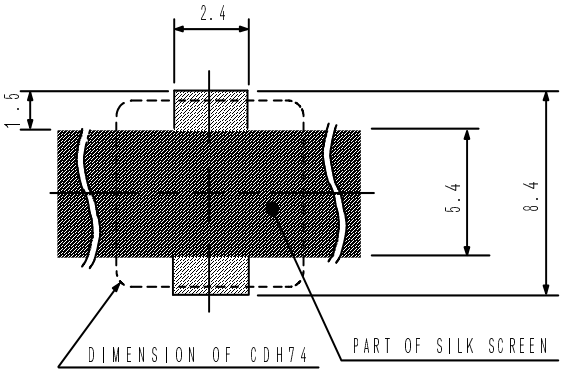

Type: CDH74

◆ Specification

Part Name ※	Stamp	Inductance (μH) 1 kHz	D.C.R.(Ω) Max.(Typ.) (at 20℃)	Rated Current (A) ※1
CDH74NP-100L□	100	10±15%	56m (43m)	2.75
CDH74NP-120L□	120	12±15%	65m (50m)	2.45
CDH74NP-150L□	150	15±15%	83m (64m)	2.10
CDH74NP-180L□	180	18±15%	94m (72m)	1.95
CDH74NP-220L□	220	22±15%	0.13(0.10)	1.70
CDH74NP-270K□	270	27±10%	0.16(0.12)	1.55
CDH74NP-330K□	330	33±10%	0.17(0.13)	1.45
CDH74NP-390K□	390	39±10%	0.21(0.16)	1.30
CDH74NP-470K□	470	47±10%	0.23(0.18)	1.20
CDH74NP-560K□	560	56±10%	0.26(0.20)	1.15
CDH74NP-680K□	680	68±10%	0.35(0.27)	1.00
CDH74NP-820J□	820	82±5%	0.48(0.37)	0.92
CDH74NP-101J□	101	100±5%	0.55(0.42)	0.81
CDH74NP-121J□	121	120±5%	0.62(0.48)	0.73
CDH74NP-151J□	151	150±5%	0.72(0.55)	0.71
CDH74NP-181J□	181	180±5%	0.82(0.63)	0.66
CDH74NP-221J□	221	220±5%	1.08(0.83)	0.55
CDH74NP-271J□	271	270±5%	1.38(1.10)	0.48
CDH74NP-331J□	331	330±5%	1.55(1.24)	0.40
CDH74NP-391J□	391	390±5%	2.09(1.67)	0.38
CDH74NP-471J□	471	470±5%	2.39(1.91)	0.33

※ Description of part name

CDH74NP-100L□
- B Box
- C Carrier Tape

※1. Rated current: The DC current at which the inductance decreases to 90% of it's initial value or when △t=40℃, whichever is lower(Ta=20℃).