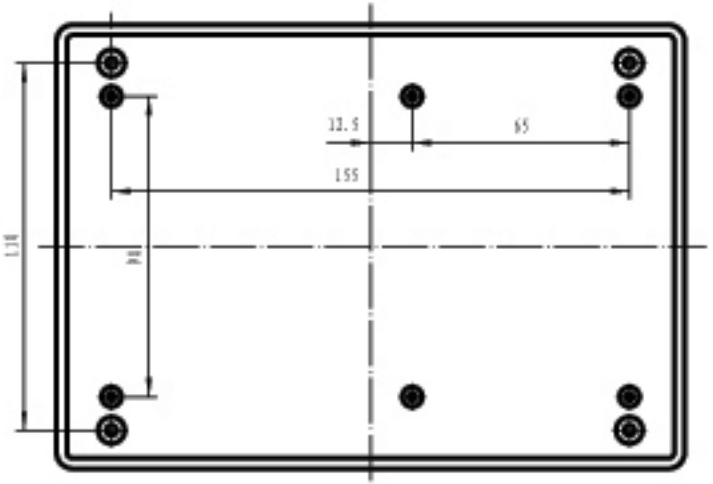
12.5
65
155
118
90

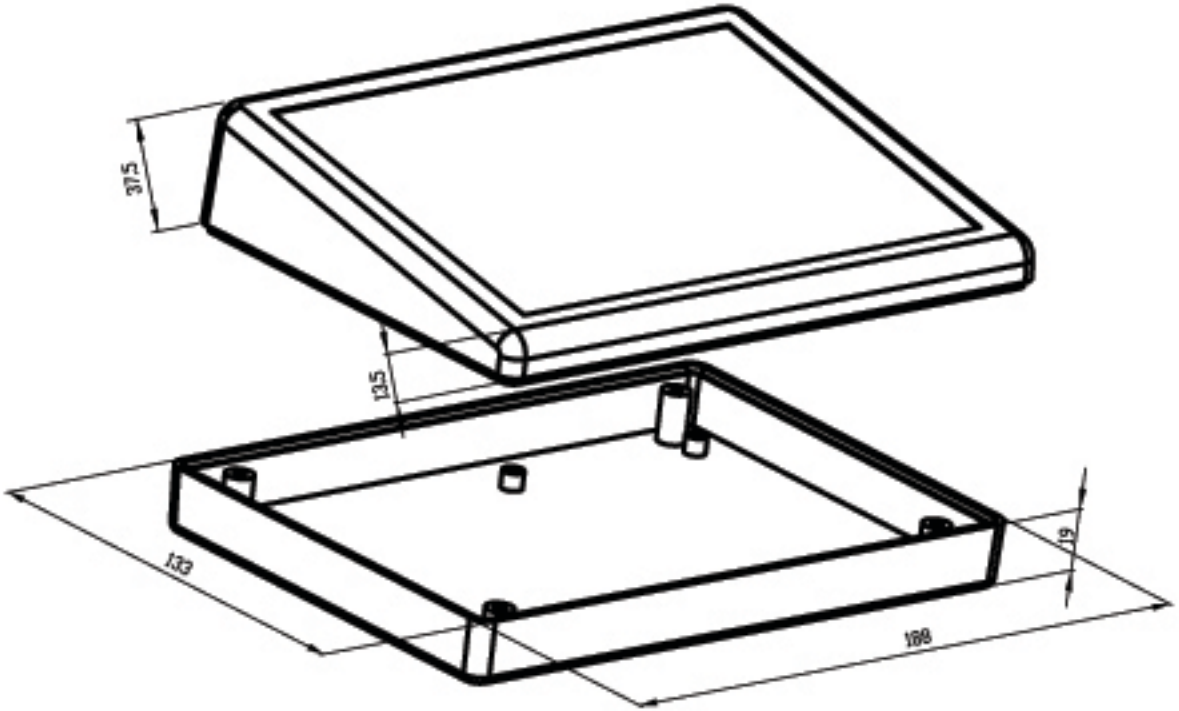
37.5
13.5
133
19
188

| | | | | | | | |
|---|---|---|---|---|---|---|---|
| | | | | | | | |
| | | | | | | | |
| | | | | | | | |