MC74AC32, MC74ACT32

Quad 2-Input OR Gate

ON Semiconductor®

http://onsemi.com

Features

- Outputs Source/Sink 24 mA
- ′ACT32 Has TTL Compatible Inputs
- Pb−Free Packages are Available*

MAXIMUM RATINGS

Rating	Symbol	Value	Unit
DC Supply Voltage (Referenced to GND)	V_{CC}	−0.5 to +7.0	V
DC Input Voltage (Referenced to GND)	V_{in}	−0.5 to V_{CC} +0.5	V
DC Output Voltage (Referenced to GND)	V_{out}	−0.5 to V_{CC} +0.5	V
DC Input Current, per Pin	I_{in}	±20	mA
DC Output Sink/Source Current, per Pin	I_{out}	±50	mA
DC V_{CC} or GND Current per Output Pin	I_{CC}	±50	mA
Storage Temperature	T_{stg}	−65 to +150	°C

Maximum ratings are those values beyond which device damage can occur. Maximum ratings applied to the device are individual stress limit values (not normal operating conditions) and are not valid simultaneously. If these limits are exceeded, device functional operation is not implied, damage may occur and reliability may be affected.

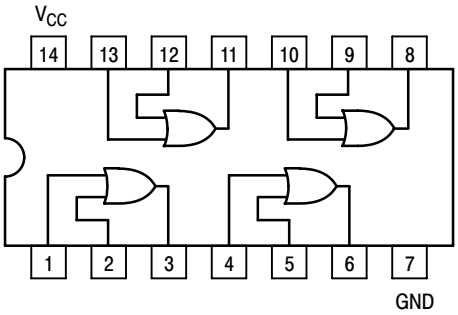

Figure 1. Pinout: 14−Lead Packages Conductors
(Top View)

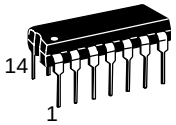

PDIP−14
N SUFFIX
CASE 646

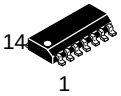

SOIC−14
D SUFFIX
CASE 751A

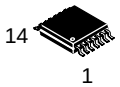

TSSOP−14
DT SUFFIX
CASE 948G

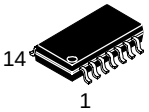

SOEIAJ−14
M SUFFIX
CASE 965

DEVICE MARKING INFORMATION

See specific marking information in the device marking section on page 5 of this data sheet.

ORDERING INFORMATION

See detailed ordering and shipping information in the package dimensions section on page 5 of this data sheet.

© Semiconductor Components Industries, LLC, 2005

June, 2005 − Rev. 6

Publication Order Number:
MC74AC32/D

RECOMMENDED OPERATING CONDITIONS

Symbol	Parameter		Min	Typ	Max	Unit
V_{CC}	Supply Voltage	′AC	2.0	5.0	6.0	V
		′ACT	4.5	5.0	5.5	
V_{in}, V_{out}	DC Input Voltage, Output Voltage (Ref. to GND)		0	−	V_{CC}	V
t_r, t_f	Input Rise and Fall Time (Note 1) ′AC Devices except Schmitt Inputs	V_{CC} @ 3.0 V	−	150	−	ns/V
		V_{CC} @ 4.5 V	−	40	−	
		V_{CC} @ 5.5 V	−	25	−	
t_r, t_f	Input Rise and Fall Time (Note 2) ′ACT Devices except Schmitt Inputs	V_{CC} @ 4.5 V	−	10	−	ns/V
		V_{CC} @ 5.5 V	−	8.0	−	
T_J	Junction Temperature (PDIP)		−	−	140	°C
T_A	Operating Ambient Temperature Range		−40	25	85	°C
I_{OH}	Output Current − High		−	−	−24	mA
I_{OL}	Output Current − Low		−	−	24	mA

1. V_{in} from 30% to 70% V_{CC}; see individual Data Sheets for devices that differ from the typical input rise and fall times.
2. V_{in} from 0.8 V to 2.0 V; see individual Data Sheets for devices that differ from the typical input rise and fall times.

DC CHARACTERISTICS

Symbol	Parameter	V_{CC} (V)	74AC T_A = +25°C Typ	74AC T_A = +25°C Guaranteed Limits	74AC T_A = −40°C to +85°C Guaranteed Limits	Unit	Conditions
V_{IH}	Minimum High Level Input Voltage	3.0	1.5	2.1	2.1	V	V_{OUT} = 0.1 V or V_{CC} − 0.1 V
		4.5	2.25	3.15	3.15		
		5.5	2.75	3.85	3.85		
V_{IL}	Maximum Low Level Input Voltage	3.0	1.5	0.9	0.9	V	V_{OUT} = 0.1 V or V_{CC} − 0.1 V
		4.5	2.25	1.35	1.35		
		5.5	2.75	1.65	1.65		
V_{OH}	Minimum High Level Output Voltage	3.0	2.99	2.9	2.9	V	I_{OUT} = −50 μA
		4.5	4.49	4.4	4.4		
		5.5	5.49	5.4	5.4		
		3.0	−	2.56	2.46	V	*V_{IN} = V_{IL} or V_{IH}
		4.5	−	3.86	3.76		I_{OH} −12 mA
		5.5	−	4.86	4.76		−24 mA −24 mA
V_{OL}	Maximum Low Level Output Voltage	3.0	0.002	0.1	0.1	V	I_{OUT} = 50 μA
		4.5	0.001	0.1	0.1		
		5.5	0.001	0.1	0.1		
		3.0	−	0.36	0.44	V	*V_{IN} = V_{IL} or V_{IH}
		4.5	−	0.36	0.44		I_{OL} 12 mA
		5.5	−	0.36	0.44		24 mA 24 mA
I_{IN}	Maximum Input Leakage Current	5.5	−	±0.1	±1.0	μA	V_I = V_{CC}, GND
I_{OLD}	†Minimum Dynamic Output Current	5.5	−	−	75	mA	V_{OLD} = 1.65 V Max
I_{OHD}		5.5	−	−	−75	mA	V_{OHD} = 3.85 V Min
I_{CC}	Maximum Quiescent Supply Current	5.5	−	4.0	40	μA	V_{IN} = V_{CC} or GND

*All outputs loaded; thresholds on input associated with output under test.
†Maximum test duration 2.0 ms, one output loaded at a time.
NOTE: I_{IN} and I_{CC} @ 3.0 V are guaranteed to be less than or equal to the respective limit @ 5.5 V V_{CC}.

AC CHARACTERISTICS (For Figures and Waveforms − See Section 3 of the ON Semiconductor FACT Data Book, DL138/D)

Symbol	Parameter	V_{CC}* (V)	74AC T_A = +25°C C_L = 50 pF			74AC T_A = −40°C to +85°C C_L = 50 pF		Unit	Fig. No.
			Min	Typ	Max	Min	Max		
t_{PLH}	Propagation Delay	3.3 5.0	1.5 1.5	7.0 5.5	9.0 7.5	1.5 1.0	10.0 8.5	ns	3−5
t_{PHL}	Propagation Delay	3.3 5.0	1.5 1.5	7.0 5.0	8.5 7.0	1.0 1.0	9.0 7.5	ns	3−5

*Voltage Range 3.3 V is 3.3 V ±0.3 V.
Voltage Range 5.0 V is 5.0 V ±0.5 V.

DC CHARACTERISTICS

Symbol	Parameter	V_{CC} (V)	74ACT T_A = +25°C		74ACT T_A = −40°C to +85°C	Unit	Conditions
			Typ	Guaranteed Limits			
V_{IH}	Minimum High Level Input Voltage	4.5 5.5	1.5 1.5	2.0 2.0	2.0 2.0	V	V_{OUT} = 0.1 V or V_{CC} − 0.1 V
V_{IL}	Maximum Low Level Input Voltage	4.5 5.5	1.5 1.5	0.8 0.8	0.8 0.8	V	V_{OUT} = 0.1 V or V_{CC} − 0.1 V
V_{OH}	Minimum High Level Output Voltage	4.5 5.5	4.49 5.49	4.4 5.4	4.4 5.4	V	I_{OUT} = −50 μA
		4.5 5.5	− −	3.86 4.86	3.76 4.76	V	*V_{IN} = V_{IL} or V_{IH} I_{OH} −24 mA −24 mA
V_{OL}	Maximum Low Level Output Voltage	4.5 5.5	0.001 0.001	0.1 0.1	0.1 0.1	V	I_{OUT} = 50 μA
		4.5 5.5	− −	0.36 0.36	0.44 0.44	V	*V_{IN} = V_{IL} or V_{IH} I_{OL} 24 mA 24 mA
I_{IN}	Maximum Input Leakage Current	5.5	−	±0.1	±1.0	μA	V_I = V_{CC}, GND
ΔI_{CCT}	Additional Max. I_{CC}/Input	5.5	0.6	−	1.5	mA	V_I = V_{CC} − 2.1 V
I_{OLD}	†Minimum Dynamic Output Current	5.5	−	−	75	mA	V_{OLD} = 1.65 V Max
I_{OHD}		5.5	−	−	−75	mA	V_{OHD} = 3.85 V Min
I_{CC}	Maximum Quiescent Supply Current	5.5	−	4.0	40	μA	V_{IN} = V_{CC} or GND

*All outputs loaded; thresholds on input associated with output under test.
†Maximum test duration 2.0 ms, one output loaded at a time.

AC CHARACTERISTICS (For Figures and Waveforms − See Section 3 of the ON Semiconductor FACT Data Book, DL138/D)

Symbol	Parameter	V_{CC}* (V)	74ACT T_A = +25°C C_L = 50 pF			74ACT T_A = −40°C to +85°C C_L = 50 pF		Unit	Fig. No.
			Min	Typ	Max	Min	Max		
t_{PLH}	Propagation Delay	5.0	1.0	−	9.0	1.0	10.0	ns	3−6
t_{PHL}	Propagation Delay	5.0	1.0	−	9.0	1.0	10.0	ns	3−6

*Voltage Range 5.0 V is 5.0 V ±0.5 V.

CAPACITANCE

Symbol	Parameter	Value Typ	Unit	Test Conditions
C_{IN}	Input Capacitance	4.5	pF	V_{CC} = 5.0 V
C_{PD}	Power Dissipation Capacitance	20	pF	V_{CC} = 5.0 V

MARKING DIAGRAMS

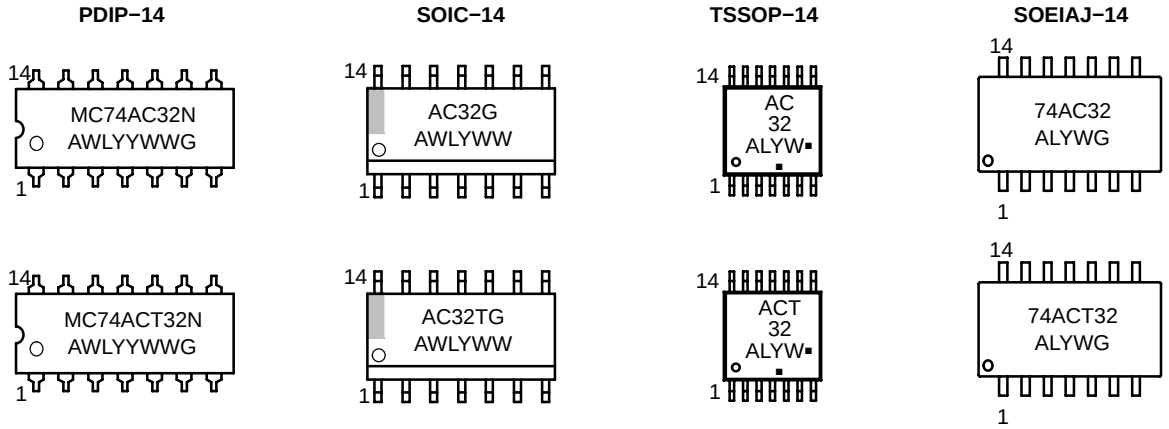

A = Assembly Location
L, WL = Wafer Lot
Y, YY = Year
W, WW = Work Week
G = Pb−Free Package
▪ = Pb−Free Package
(Note: Microdot may be in either location)

ORDERING INFORMATION

Device	Package	Shipping†
MC74AC32N	PDIP−14	25 Units / Rail
MC74AC32NG	PDIP−14 (Pb−Free)	25 Units / Rail
MC74ACT32N	PDIP−14	25 Units / Rail
MC74ACT32NG	PDIP−14 (Pb−Free)	25 Units / Rail
MC74AC32D	SOIC−14	55 Units / Rail
MC74AC32DG	SOIC−14 (Pb−Free)	55 Units / Rail
MC74AC32DR2	SOIC−14	2500 Units / Reel
MC74AC32DR2G	SOIC−14 (Pb−Free)	2500 Units / Reel
MC74ACT32D	SOIC−14	55 Units / Rail
MC74ACT32DG	SOIC−14 (Pb−Free)	55 Units / Rail
MC74ACT32DR2	SOIC−14	2500 Units / Reel
MC74ACT32DR2G	SOIC−14 (Pb−Free)	2500 Units / Reel
MC74AC32DTR2	TSSOP−14*	2500 Units / Reel
MC74AC32DTR2G	TSSOP−14*	2500 Units / Reel
MC74ACT32DTR2	TSSOP−14*	2500 Units / Reel
MC74ACT32DTR2G	TSSOP−14*	2500 Units / Reel
MC74AC32MEL	SOEIAJ−14	2000 Units / Reel
MC74AC32MELG	SOEIAJ−14 (Pb−Free)	2000 Units / Reel
MC74ACT32MEL	SOEIAJ−14	2000 Units / Reel
MC74ACT32MELG	SOEIAJ−14 (Pb−Free)	2000 Units / Reel

†For information on tape and reel specifications, including part orientation and tape sizes, please refer to our Tape and Reel Packaging Specifications Brochure, BRD8011/D.
*This package is inherently Pb−Free.

PACKAGE DIMENSIONS

PDIP−14
N SUFFIX
CASE 646−06
ISSUE N

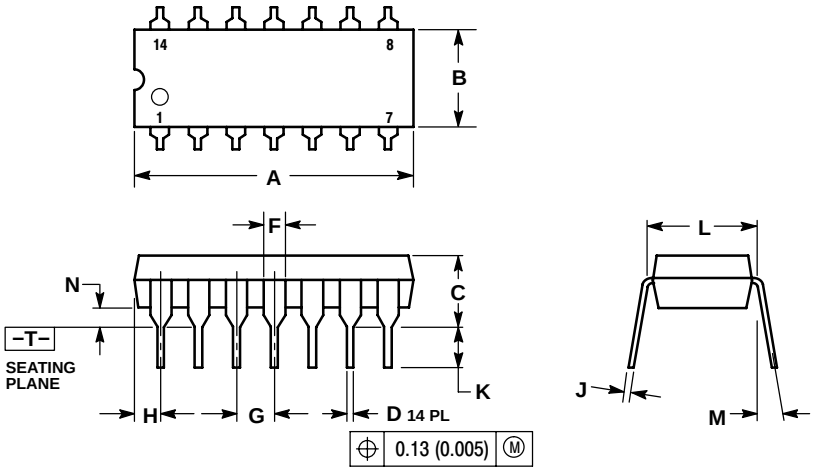

NOTES:
1. DIMENSIONING AND TOLERANCING PER ANSI Y14.5M, 1982.
2. CONTROLLING DIMENSION: INCH.
3. DIMENSION L TO CENTER OF LEADS WHEN FORMED PARALLEL.
4. DIMENSION B DOES NOT INCLUDE MOLD FLASH.
5. ROUNDED CORNERS OPTIONAL.

	INCHES		MILLIMETERS	
DIM	MIN	MAX	MIN	MAX
A	0.715	0.770	18.16	18.80
B	0.240	0.260	6.10	6.60
C	0.145	0.185	3.69	4.69
D	0.015	0.021	0.38	0.53
F	0.040	0.070	1.02	1.78
G	0.100 BSC		2.54 BSC	
H	0.052	0.095	1.32	2.41
J	0.008	0.015	0.20	0.38
K	0.115	0.135	2.92	3.43
L	0.290	0.310	7.37	7.87
M	−−−	10 °	−−−	10 °
N	0.015	0.039	0.38	1.01

SOIC−14
D SUFFIX
CASE 751A−03
ISSUE G

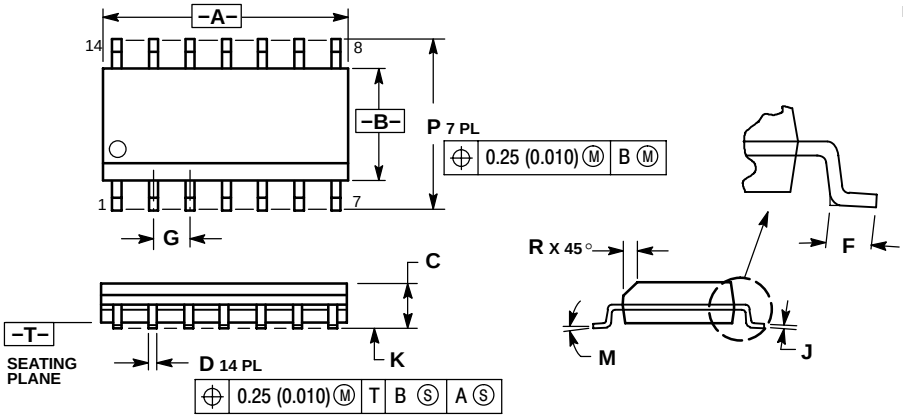

NOTES:
1. DIMENSIONING AND TOLERANCING PER ANSI Y14.5M, 1982.
2. CONTROLLING DIMENSION: MILLIMETER.
3. DIMENSIONS A AND B DO NOT INCLUDE MOLD PROTRUSION.
4. MAXIMUM MOLD PROTRUSION 0.15 (0.006) PER SIDE.
5. DIMENSION D DOES NOT INCLUDE DAMBAR PROTRUSION. ALLOWABLE DAMBAR PROTRUSION SHALL BE 0.127 (0.005) TOTAL IN EXCESS OF THE D DIMENSION AT MAXIMUM MATERIAL CONDITION.

	MILLIMETERS		INCHES	
DIM	MIN	MAX	MIN	MAX
A	8.55	8.75	0.337	0.344
B	3.80	4.00	0.150	0.157
C	1.35	1.75	0.054	0.068
D	0.35	0.49	0.014	0.019
F	0.40	1.25	0.016	0.049
G	1.27 BSC		0.050 BSC	
J	0.19	0.25	0.008	0.009
K	0.10	0.25	0.004	0.009
M	0 °	7 °	0 °	7 °
P	5.80	6.20	0.228	0.244
R	0.25	0.50	0.010	0.019

PACKAGE DIMENSIONS

TSSOP−14
DT SUFFIX
CASE 948G−01
ISSUE A

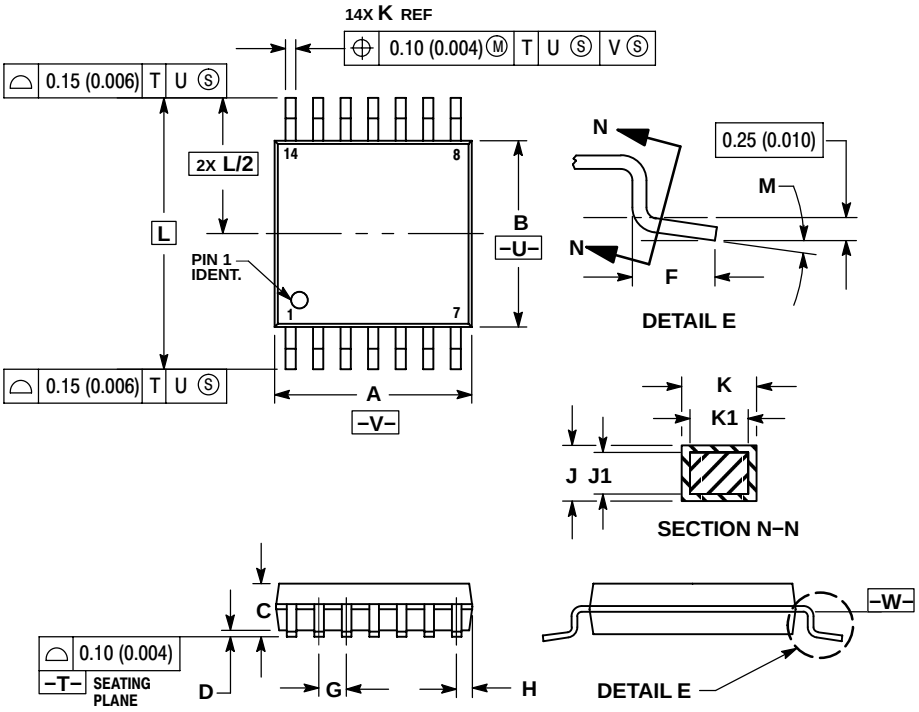

NOTES:
1. DIMENSIONING AND TOLERANCING PER ANSI Y14.5M, 1982.
2. CONTROLLING DIMENSION: MILLIMETER.
3. DIMENSION A DOES NOT INCLUDE MOLD FLASH, PROTRUSIONS OR GATE BURRS. MOLD FLASH OR GATE BURRS SHALL NOT EXCEED 0.15 (0.006) PER SIDE.
4. DIMENSION B DOES NOT INCLUDE INTERLEAD FLASH OR PROTRUSION. INTERLEAD FLASH OR PROTRUSION SHALL NOT EXCEED 0.25 (0.010) PER SIDE.
5. DIMENSION K DOES NOT INCLUDE DAMBAR PROTRUSION. ALLOWABLE DAMBAR PROTRUSION SHALL BE 0.08 (0.003) TOTAL IN EXCESS OF THE K DIMENSION AT MAXIMUM MATERIAL CONDITION.
6. TERMINAL NUMBERS ARE SHOWN FOR REFERENCE ONLY.
7. DIMENSION A AND B ARE TO BE DETERMINED AT DATUM PLANE −W−.

	MILLIMETERS		INCHES	
DIM	MIN	MAX	MIN	MAX
A	4.90	5.10	0.193	0.200
B	4.30	4.50	0.169	0.177
C	−−−	1.20	−−−	0.047
D	0.05	0.15	0.002	0.006
F	0.50	0.75	0.020	0.030
G	0.65 BSC		0.026 BSC	
H	0.50	0.60	0.020	0.024
J	0.09	0.20	0.004	0.008
J1	0.09	0.16	0.004	0.006
K	0.19	0.30	0.007	0.012
K1	0.19	0.25	0.007	0.010
L	6.40 BSC		0.252 BSC	
M	0 °	8 °	0 °	8 °

PACKAGE DIMENSIONS

SOEIAJ−14
M SUFFIX
CASE 965−01
ISSUE O

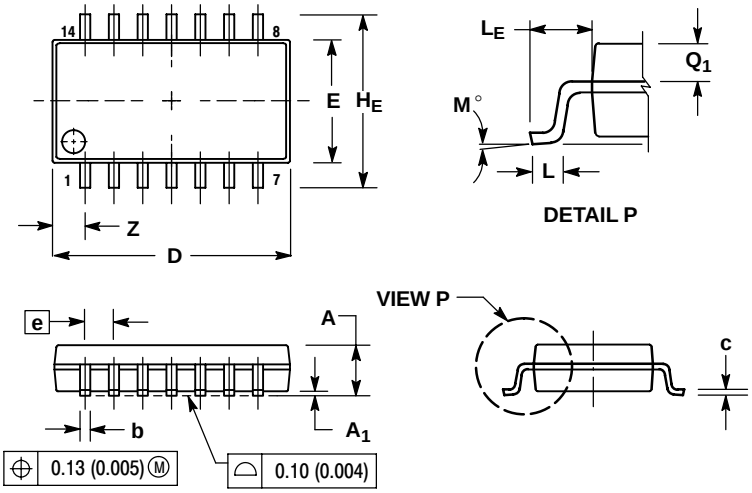

NOTES:
1. DIMENSIONING AND TOLERANCING PER ANSI Y14.5M, 1982.
2. CONTROLLING DIMENSION: MILLIMETER.
3. DIMENSIONS D AND E DO NOT INCLUDE MOLD FLASH OR PROTRUSIONS AND ARE MEASURED AT THE PARTING LINE. MOLD FLASH OR PROTRUSIONS SHALL NOT EXCEED 0.15 (0.006) PER SIDE.
4. TERMINAL NUMBERS ARE SHOWN FOR REFERENCE ONLY.
5. THE LEAD WIDTH DIMENSION (b) DOES NOT INCLUDE DAMBAR PROTRUSION. ALLOWABLE DAMBAR PROTRUSION SHALL BE 0.08 (0.003) TOTAL IN EXCESS OF THE LEAD WIDTH DIMENSION AT MAXIMUM MATERIAL CONDITION. DAMBAR CANNOT BE LOCATED ON THE LOWER RADIUS OR THE FOOT. MINIMUM SPACE BETWEEN PROTRUSIONS AND ADJACENT LEAD TO BE 0.46 (0.018).

	MILLIMETERS		INCHES	
DIM	MIN	MAX	MIN	MAX
A	---	2.05	---	0.081
A_1	0.05	0.20	0.002	0.008
b	0.35	0.50	0.014	0.020
c	0.18	0.27	0.007	0.011
D	9.90	10.50	0.390	0.413
E	5.10	5.45	0.201	0.215
e	1.27 BSC		0.050 BSC	
H_E	7.40	8.20	0.291	0.323
L	0.50	0.85	0.020	0.033
L_E	1.10	1.50	0.043	0.059
M	0 °	10 °	0 °	10 °
Q_1	0.70	0.90	0.028	0.035
Z	---	1.42	---	0.056

ON Semiconductor and are registered trademarks of Semiconductor Components Industries, LLC (SCILLC). SCILLC reserves the right to make changes without further notice to any products herein. SCILLC makes no warranty, representation or guarantee regarding the suitability of its products for any particular purpose, nor does SCILLC assume any liability arising out of the application or use of any product or circuit, and specifically disclaims any and all liability, including without limitation special, consequential or incidental damages. "Typical" parameters which may be provided in SCILLC data sheets and/or specifications can and do vary in different applications and actual performance may vary over time. All operating parameters, including "Typicals" must be validated for each customer application by customer's technical experts. SCILLC does not convey any license under its patent rights nor the rights of others. SCILLC products are not designed, intended, or authorized for use as components in systems intended for surgical implant into the body, or other applications intended to support or sustain life, or for any other application in which the failure of the SCILLC product could create a situation where personal injury or death may occur. Should Buyer purchase or use SCILLC products for any such unintended or unauthorized application, Buyer shall indemnify and hold SCILLC and its officers, employees, subsidiaries, affiliates, and distributors harmless against all claims, costs, damages, and expenses, and reasonable attorney fees arising out of, directly or indirectly, any claim of personal injury or death associated with such unintended or unauthorized use, even if such claim alleges that SCILLC was negligent regarding the design or manufacture of the part. SCILLC is an Equal Opportunity/Affirmative Action Employer. This literature is subject to all applicable copyright laws and is not for resale in any manner.

PUBLICATION ORDERING INFORMATION

LITERATURE FULFILLMENT:
Literature Distribution Center for ON Semiconductor
P.O. Box 61312, Phoenix, Arizona 85082−1312 USA
Phone: 480−829−7710 or 800−344−3860 Toll Free USA/Canada
Fax: 480−829−7709 or 800−344−3867 Toll Free USA/Canada
Email: orderlit@onsemi.com

N. American Technical Support: 800−282−9855 Toll Free USA/Canada

Japan: ON Semiconductor, Japan Customer Focus Center
2−9−1 Kamimeguro, Meguro−ku, Tokyo, Japan 153−0051
Phone: 81−3−5773−3850

ON Semiconductor Website: http://onsemi.com

Order Literature: http://www.onsemi.com/litorder

For additional information, please contact your local Sales Representative.