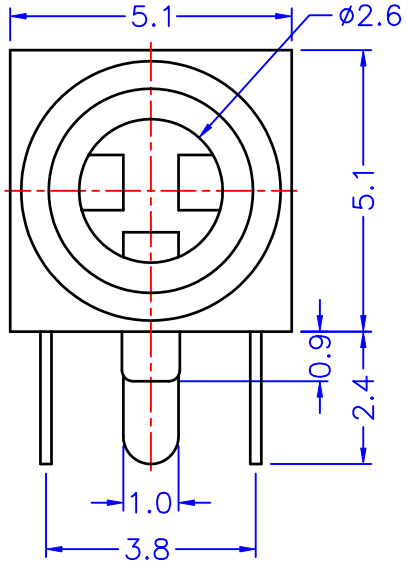

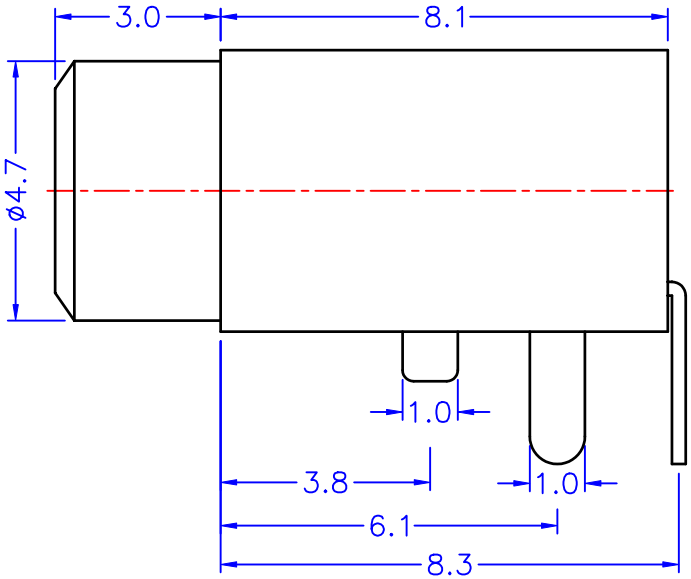

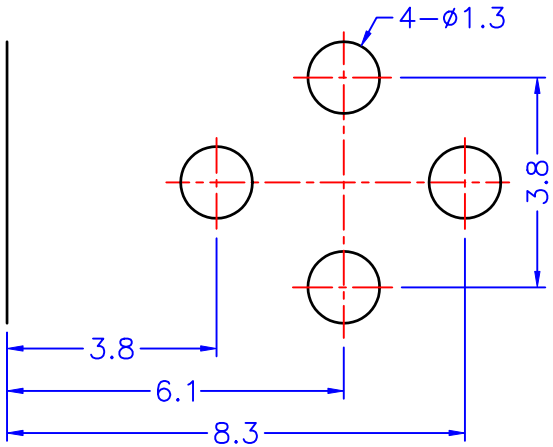

P.C.B LAYOUT

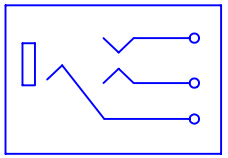

SCHEMATIC

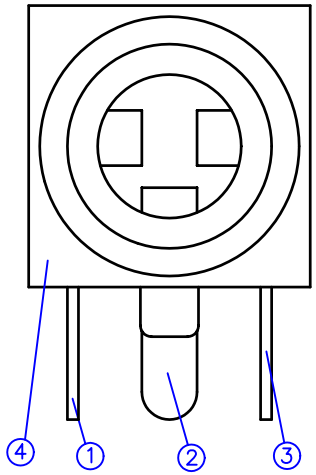

DO NOT SCALE DRAWING

FUK HING INDUSTRIES CO., LTD.

ISSUE NO.	V1.0	V1.1		
DRAWN	萧 冰	萧 冰		
DATE	12-4-99	20-1-2002		
CHECKED	刘建强	刘建强		
APPROVED	陈光照	陈光照		
REMARK:				

NOTES:

1. GENERAL TOLERANCE:
   X.X ±0.30
   X.XX ±0.20
   X.XXX ±0.10
   UNLESS STATED OTHERWISE
2. ANGLE TOLERANCE:
   X.° ±5°
   X.X° ±3.0°
   X.XX° ±1.0°
   UNLESS STATED OTHERWISE
3. DIMENSIONS ARE IN MM
   UNLESS STATED OTHERWISE

MECHANICAL STRUCTURE		
INSERTION FORCE	2.0kg MAX	
EXTRACTION FORCE	0.1-2.0kg	
ACAD FILE: c:\+GOODS\EP\253		SIZE A4

MODEL NO.	EP-253

	MATERIAL		PART NO.
①	PHOSPHORIC BRONZE <Ag PLATED>	⑦	
②	PHOSPHORIC BRONZE <Ag PLATED>	⑧	
③	PHOSPHORIC BRONZE <Ag PLATED>	⑨	
④	PC	⑩	
⑤		⑪	
⑥		⑫	