HITANO ENTERPRISE CORP. ®

MULTILAYER CERAMIC CAPACITORS EPOXY COATED RADIAL TYPE

Application

NPO：Temperature compensation type, have little or no change in capacitance with variation in temperature. Hence, they are used in radio-frequency oscillators, precision timing circuits, ultra stable amplifiers, etc.

X7R：Temperature stable type for by-pass and decoupling in radio and television receivers, computers servo systems. Audio tone, and coupling, etc., where moderate capacitance variations are permissible and dissipation factor is not critical.

Z5U/Y5V：General type for by-pass and filtering applications.

Construction

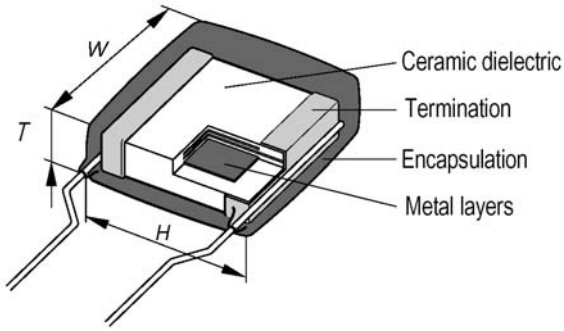

Part Number Designation:

R15	Z	104	M	1H	L	5	L
SIZE	T.C	Capacitance-Code	Tolerance	Voltage	Lead shape	Lead space	Package-Lead-length
R15 R20 R25	N=NPO W=X7R Z=Z5U Y=Y5V	Two significant digits ＋NO. of zeros. Example 102=1000pf 223=22000pf 104=100000pf	G=±2% J=±5% K=±10% M=±20% Z=+80/-20%	1C=16V 1E=25V 1H=50V 1J=63V 2A=100V 2E=250V 2H=500V 3A=1KV 3D=2KV 3F=3KV	L=Straight Y=Inside Crimp H=High seated	2=2.54±0.8 5=5.08±0.8 (mm)	R=Tape/Reel B=Tape/Box 6=6±1mm L=25.4mm(min)

1. LEAD SHAPE：

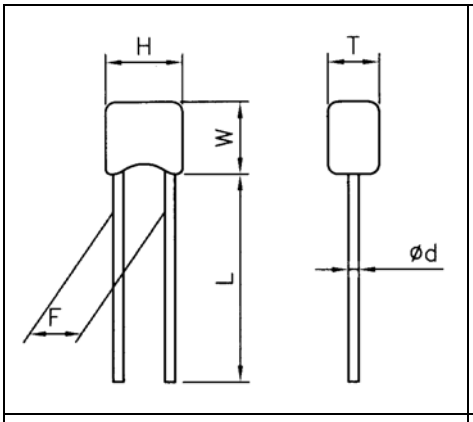	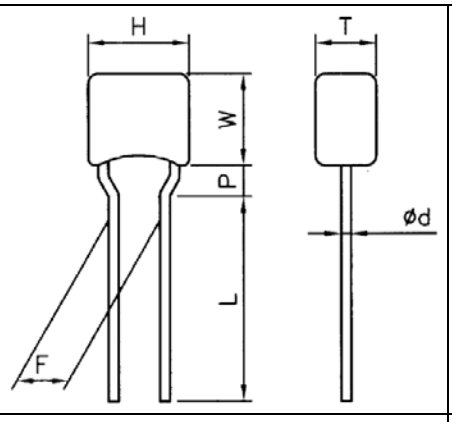	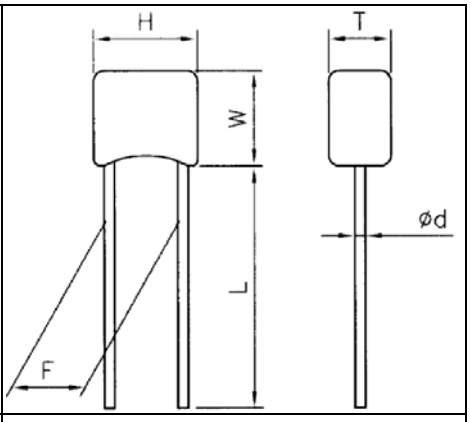
R15 L	R20 Y	R25 L
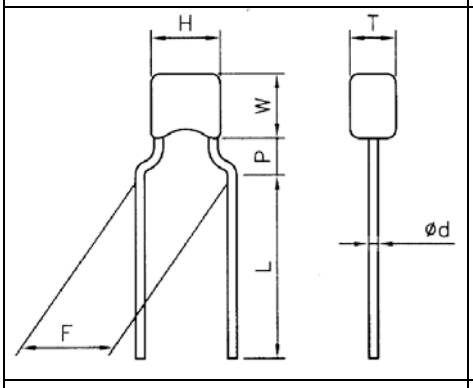	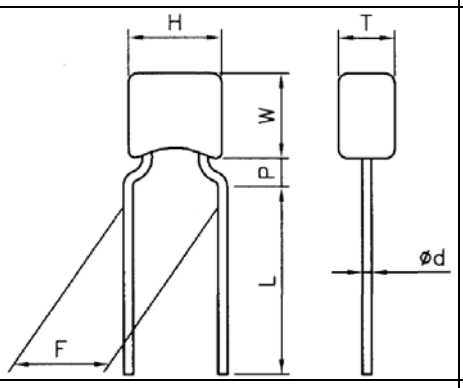	
R15 H	R20 H	

HITANO ENTERPRISE CORP. ®

MULTILAYER CERAMIC CAPACITORS EPOXY COATED RADIAL TYPE

2. LEAD SPACE (F)

CODE	LEAD SPACE (mm/inch)	
2	2.54±0.8	0.1±0.032
5	5.08±0.8	0.2±0.032

3. LEAD LENGTH (L)

CODE	LEAD LENGTH	REMARK
6	6mm±1mm	Specified lead length upon request.
L	25.4mm (min)	

4. BODY SIZE & DIMENSION

Size code	Lead style available	Capacitance Range			Dimensions (mm)					
		NPO	X7R	Z5U	H max	W max	T max.	d±0.05	F±0.08	P
R15	H	250V: 10 – 1200pF	250V: 100pF – 0.01uF	---	3.8	3.8	2.5	0.5	5.08	2.0
		500V: 10 – 470pF	500V: 100 – 4700pF							
R20	H	250V: 1500 – 6800pF	250V: 0.012 – 0.1uF	---	5.0	6.0	3.0	0.5	5.08	2.0
		500V: 560 – 3300pF	500V: 0.0056 – 0.022uF							
		1KV: 10 – 2200pF	1KV: 220 – 3900pF							
		2KV: 10 – 560pF	2KV: 220 – 1800pF							
		3KV: 10 – 221pF	3KV: ------							
R25	L	250V: 0.0082 – 0.01uF	250V: 0.12 – 0.47uF	250V: 0.1-0.47uF	6.5	6.5	4.0	0.5	5.08	---
		500V: 3900 – 6800pF	500V: 0.027 – 0.15uF							
		1KV: 2700 – 4700pF	1KV: 4700pF – 0.018uF							
		2KV: 680 – 1200pF	2KV: 2200 – 4700pF							
		3KV: 270 – 470pF	3KV: 100 – 2200pF							

Typical Performance Characteristics

Specifications

Temperature coefficient

- NPO: ± 30PPM/℃, -55℃ to +125℃
- X7R: ± 15%, -55℃ to +125℃
- Z5U: +22%,-56%, +10℃ to +85℃
- Y5V: +22%, -82%, -30℃ to +85℃

Capacitance test 25℃

- NPO: 1 VRMS max at 1 KHz (1 MHz for 100pF or less)
- X7R: 1 VRMS max at 1 KHz
  Z5U: 1 VRMS max at 1 KHz

Dissipation Factor 25℃

- **NPO:** 0.15% max at 1KHz, 1 Vrms max.(1MHz for 1000pF or less)
- **X7R:** 2.5% max at 1KHz, 1 Vrms max
- **Z5U:** 5 % max at 1 KHz, 1 Vrms max.

Dielectric strength 25℃ (Flash Test)

- NPO: 250V-2.0 X Vrated, 500V-1.5 X Vrated, ≥1KV-1.2 X Vrated
- X7R: 250V-2.0 X Vrated, 500V-1.5 X Vrated, ≥1KV-1.2 X Vrated
- Z5U: 2.0 X Vrated

LifeTest :

(1000 hrs at max temp. applied with Flash test voltage Recovery: 6-24 hrs for NPO and 24± 2 hrs for X7R & Z5U)

	NPO	X7R	Z5U
ΔC/C	≤ ± 3%	≤ ± 20%	≤ ±20%
D.F.	≤ 2 x initial	≤ ±7%	≤ 2 x initial
I .R.		≥0.25 x initial	

Insulation Resistance after 60 secs, charging at rated voltage, 25℃, 55%R.H. max

- NPO: 100GΩ or 1000MΩ-uF whichever is less
- X7R : 10GΩ or 100MΩ-uF whichever is less
- Z5U : 10GΩ or 100MΩ-uF whichever is less
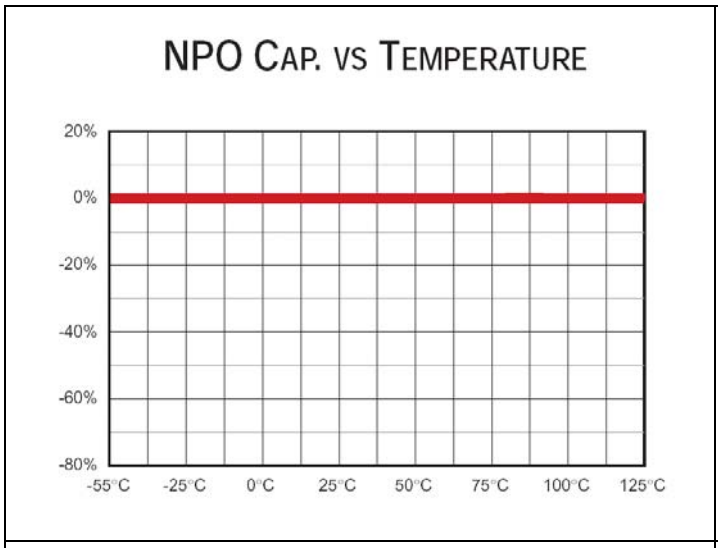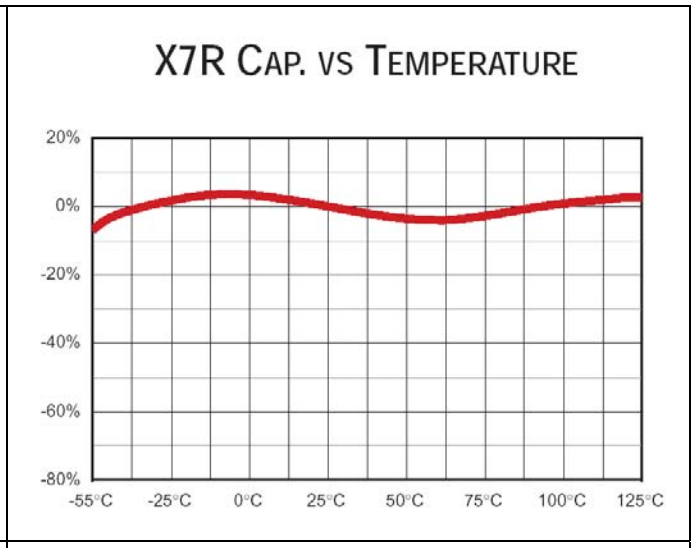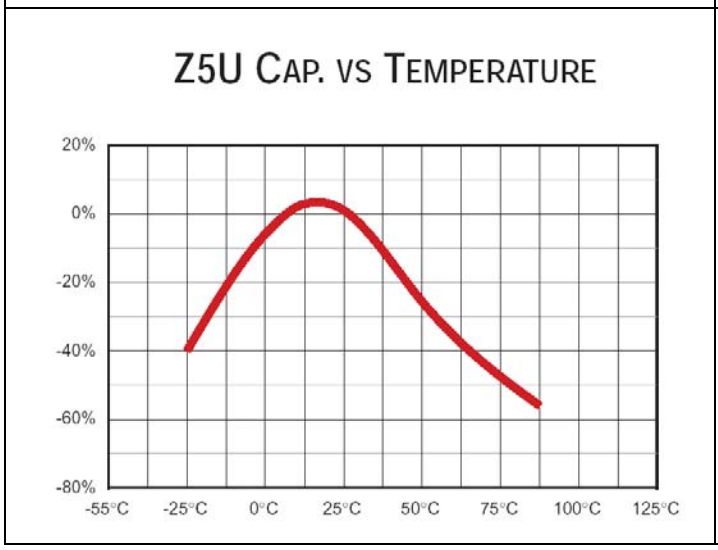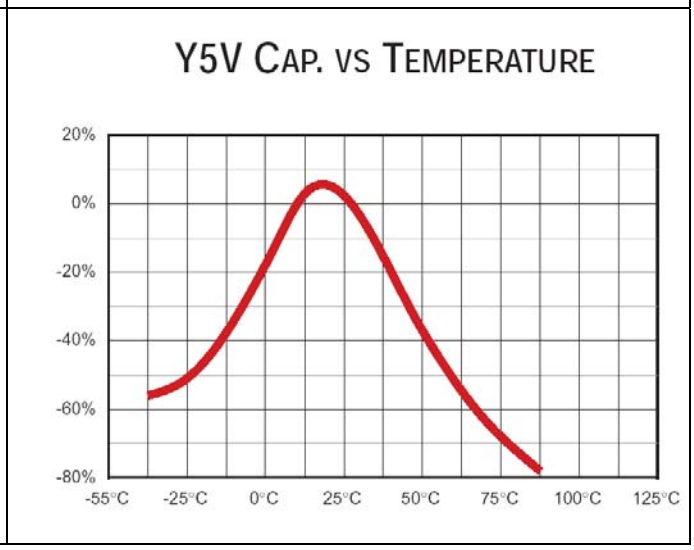
TEMPERATURE CHARACTERSITCS SPECIFICATIONS