Alle Rechte vorbehalten/ *All rights reserved*

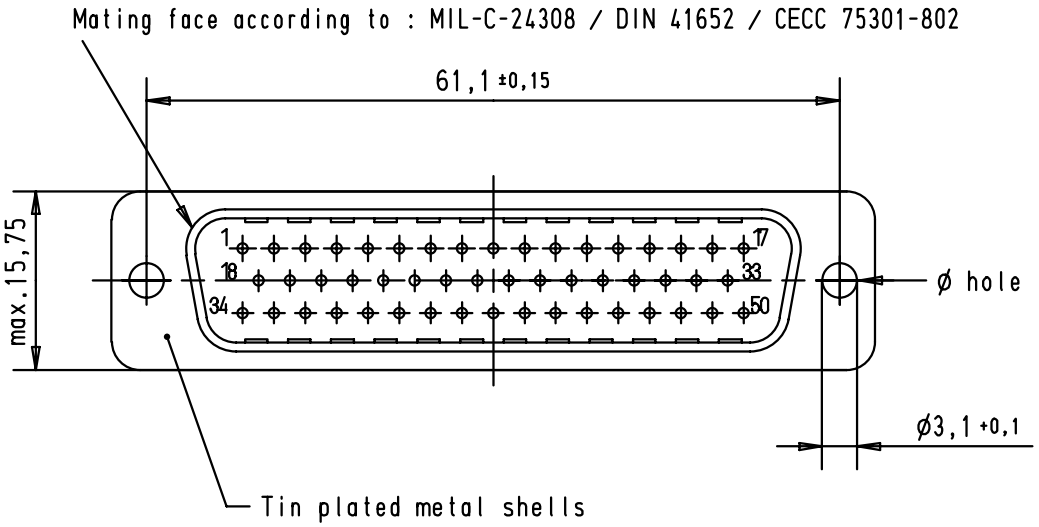

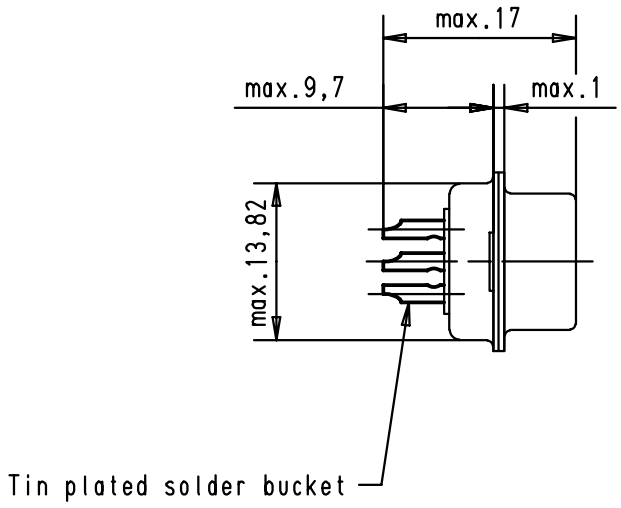

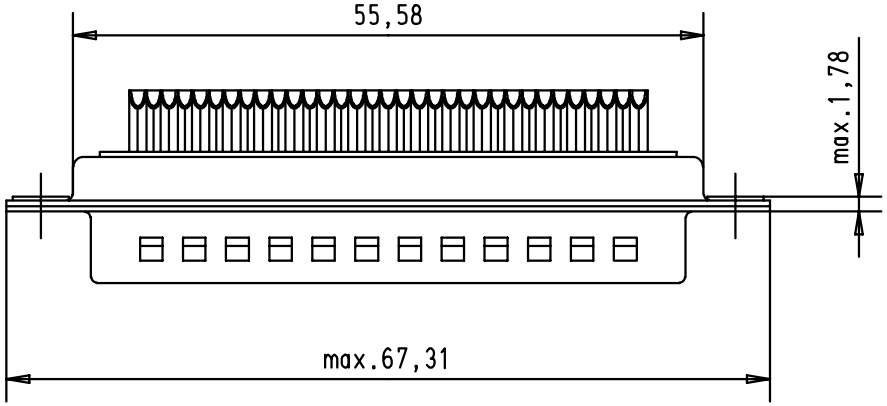

09 67 250 5615.05	$3,1^{+0,1}$	S4			
09 67 250 5615.00	$3,1^{+0,1}$	2			
09 67 250 5604.00	$3,1^{+0,1}$	3	29777	24-APR-02	CV
Part number	ø hole	Performance level	Mod.	Dat.	Name

	Dat.	Name
Detail.	24-APR-02	CV
Insp.		
Stand.		

All Dim. in mm
Orig. Size DIN A 4

HARTING EURL
F-95972 Paris

D-Sub, Male, Straight 50 Poles with stamped solder buckets and holes

Maßstab/ *Scale* 1.5:1

TB 096725056xx

Sub.

Blatt/ *Page* 1