Alle Rechte vorbehalten/ *All rights reserved*

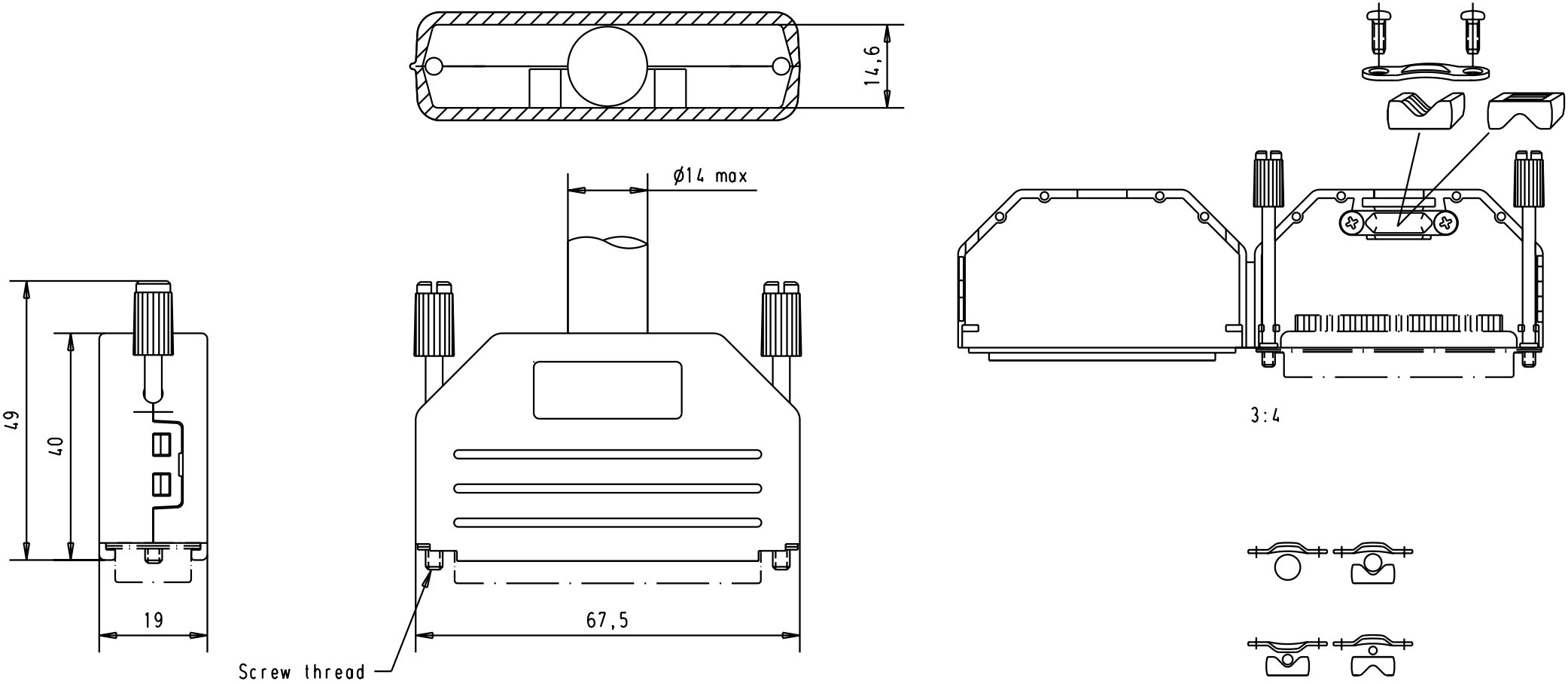

09 67 050 0426	M3		31085	4-SEP-02	CV
09 67 050 0424	4-40 UNC		29760	28-MAR-02	CV
Part number	Screw thread		Mod.	Dat.	Name

	Dat.	Name
Detail.	28-MAR-02	CV
Insp.		
Stand.		

All Dim. in mm
Orig. Size DIN A 4

D-Sub, Top entry hood
with knurled screws
50 poles
Thermoplastic black

Maßstab/ *Scale* 1:1 3:4

HARTING EURL
F-95972 Paris

TB 0967050042x

Sub.

Blatt/ *Page* 1