Alle Rechte vorbehalten/ *All rights reserved*

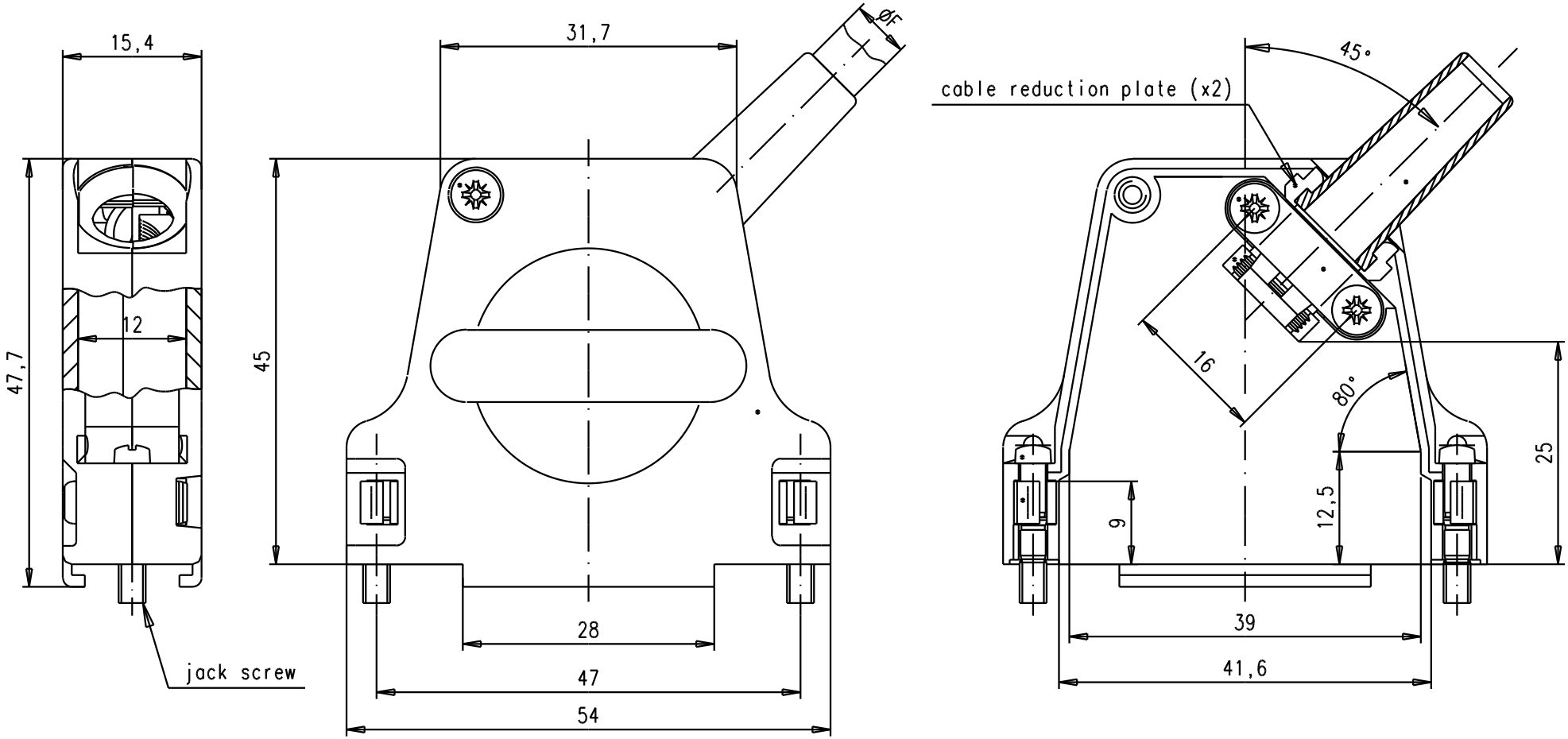

Minimum cable Ø: ØFmin=3,0
Maximum cabe Ø: - with rubber bushing : ØFmax=8,0
- without rubber bushing : ØFmax=8,5

09 67 025 0335	M3
09 67 025 0334	4-40 UNC
Part number	jack screw thread

Mod.	Dat.	Name
32329	15/11/04	TR

	Dat.	Name
Detail.	15/11/04	TR
Insp.		
Stand.		

All Dim. in mm
Orig. Size DIN A 3

HARTING EURL
F-95972 Paris

D-Sub hood 25 poles
side entry
full metal hood

Maßstab/ *Scale* 1,5:1

TB 09 67 025 033X

Sub. TB 09 67 025 0334/ TB 09 67 025 0335

Blatt/ *Page* 2/2