Alle Rechte vorbehalten/ *All rights reserved*

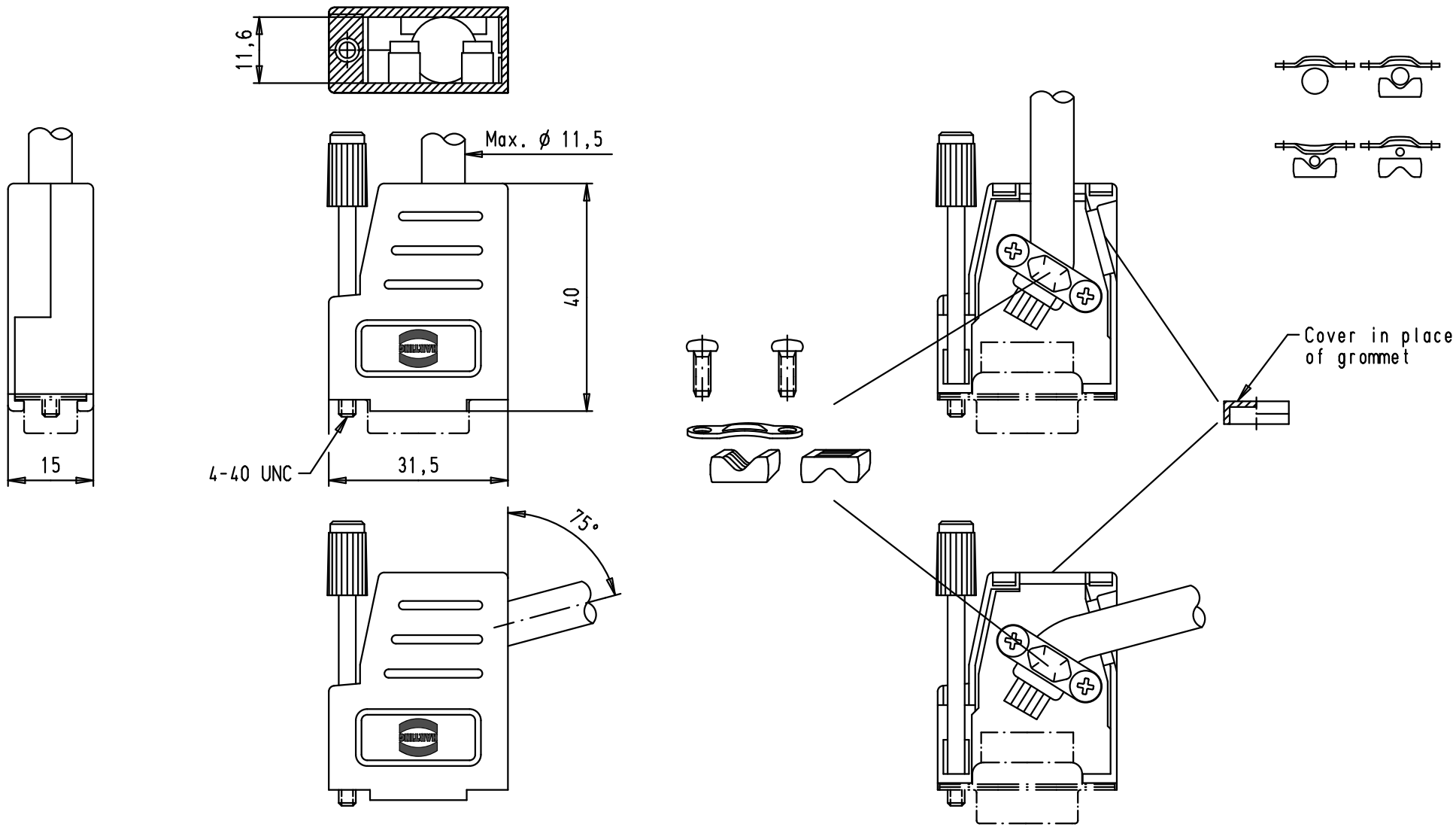

				Dat.	Name			
			Detail.	28/03/02	CV	All Dim. in mm Orig. Size DIN A 4	D-Sub, top and side entry hood with knurled screws, 9 poles, thermoplastic black	Maßstab/ *Scale* 1:1
			Insp.					
			Stand.					
34784	12/02/08	PK	HARTING EURL F-95972 Paris				TB 09 67 009 0434	Blatt/ *Page* 1/1
29760	28/03/02	CV					Sub.	
Mod.	Dat.	Name						