Alle Rechte vorbehalten/ *All rights reserved*

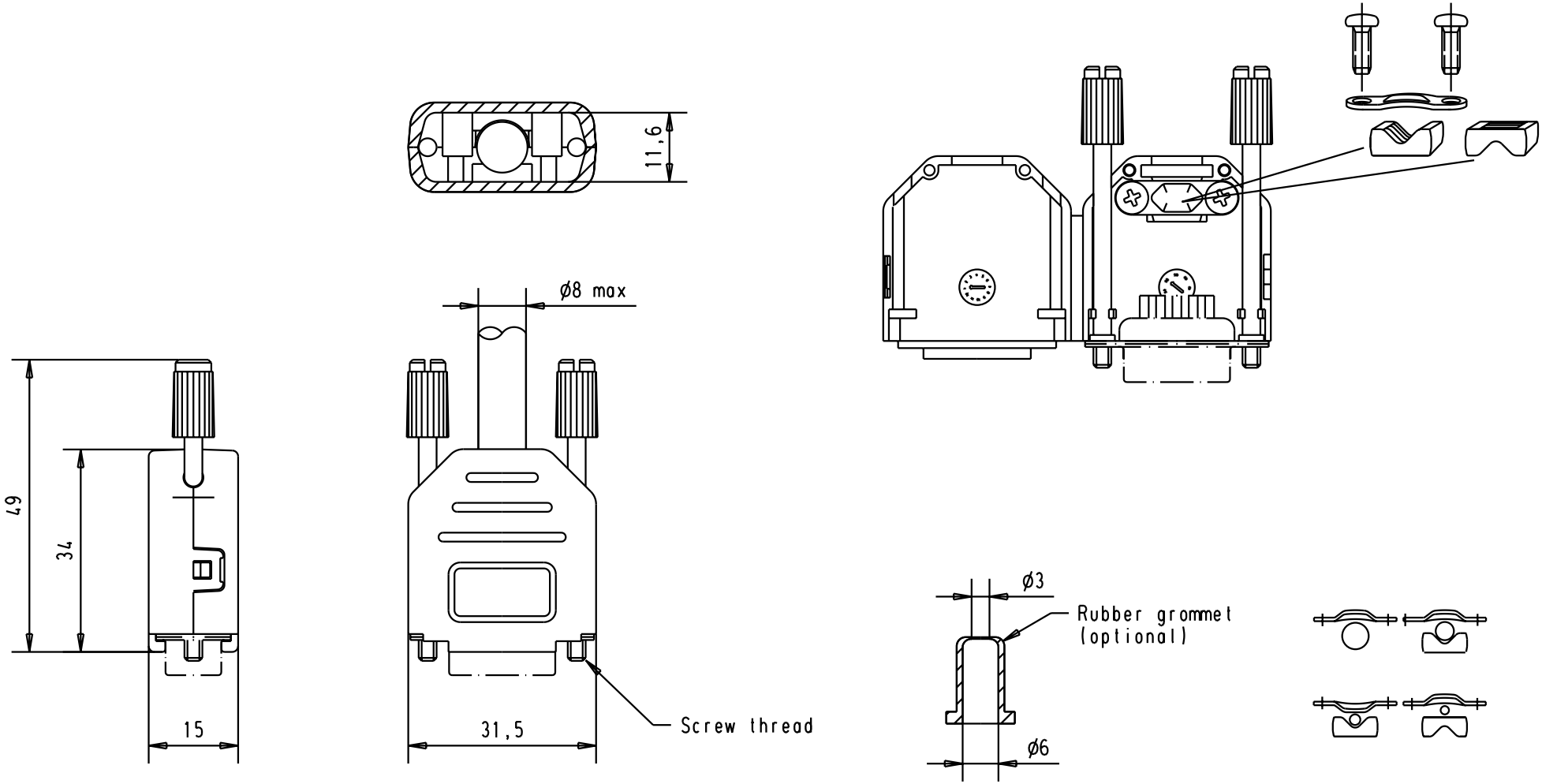


| | | | | | |
|---|---|---|---|---|---|
| | | | | | |
| | | | | | |
| | | | | | |
| | | | | | |
| 09 67 009 0426 | M3 | | 31085 | 4-SEP-02 | CV |
| 09 67 009 0424 | 4-40 UNC | | 29760 | 28-MAR-02 | CV |
| Part number | Screw thread | | Mod. | Dat. | Name |

| | Dat. | Name |
|---|---|---|
| Detail. | 28-MAR-02 | CV |
| Insp. | | |
| Stand. | | |

All Dim. in mm
Orig. Size DIN A 4

D-Sub, Top entry hood
with knurled screws
9 poles
Thermoplastic black

Maßstab/ *Scale* 1:1

HARTING EURL
F-95972 Paris

TB 0967009042x

Sub.

Blatt/ *Page* 1