Alle Rechte vorbehalten/ *All rights reserved*

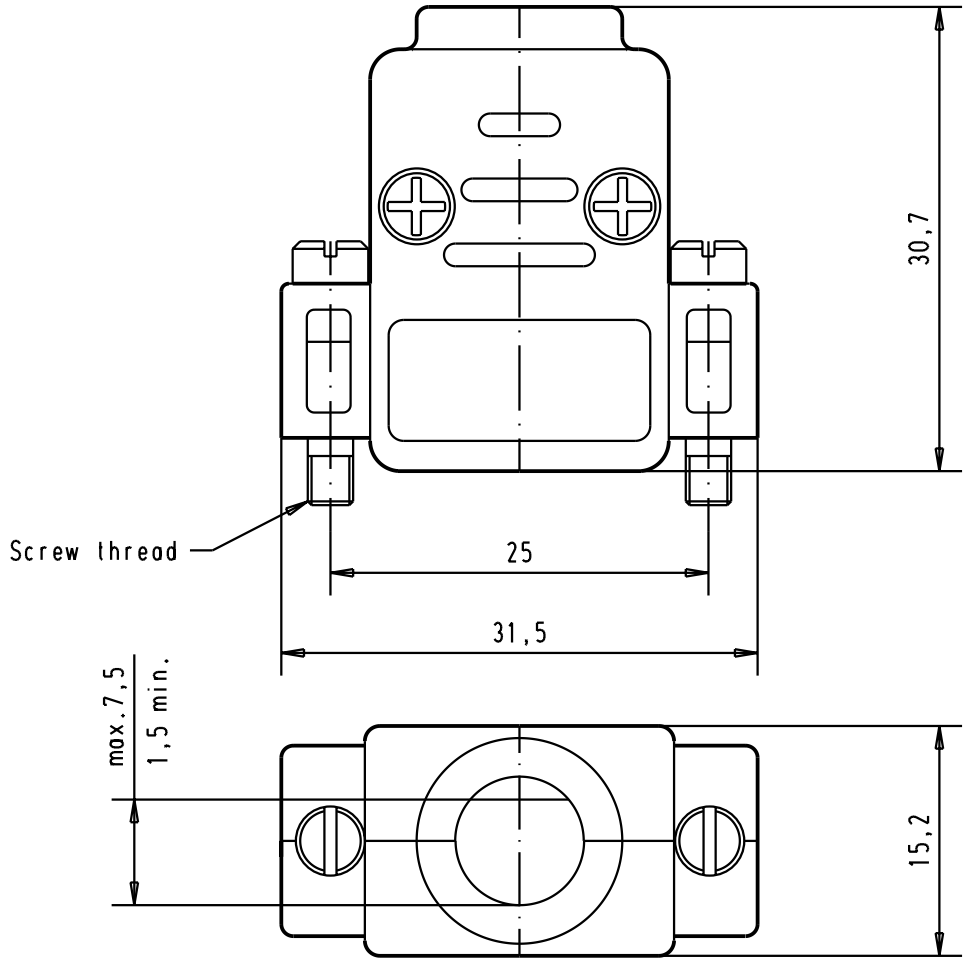

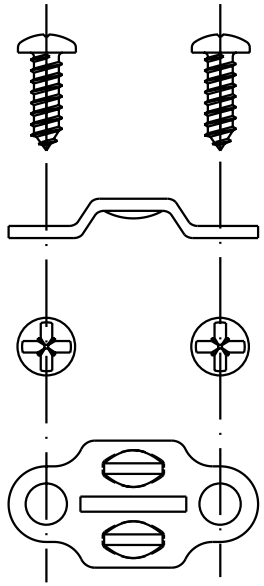

							Dat.	Name		D-Sub thermoplastic black hood, 9 poles with short locking screws.	Maßstab/ *Scale* 2:1
						Detail.	28-MAR-02	CV	All Dim. in mm Orig. Size DIN A 4		
						Insp.					
						Stand.					
			31085	4-SEP-02	CV	HARTING EURL F-95972 Paris				TB 0967 009 044x	Blatt/ *Page* 1/
09 67 009 0442	4-40 UNC		29760	28-MAR-02	CV						
Part number	Screw thread		Mod.	Dat.	Name					Sub.	