Freescale Semiconductor
Technical Data

Document Number: MW6S010N
Rev. 5, 6/2009

RF Power Field Effect Transistors

N-Channel Enhancement-Mode Lateral MOSFETs

MW6S010NR1
MW6S010GNR1

450-1500 MHz, 10 W, 28 V
LATERAL N-CHANNEL
BROADBAND RF POWER MOSFETs

Designed for Class A or Class AB base station applications with frequencies up to 1500 MHz. Suitable for analog and digital modulation and multicarrier amplifier applications.

- Typical Two-Tone Performance at 960 MHz: V_{DD} = 28 Volts, I_{DQ} = 125 mA, P_{out} = 10 Watts PEP
  Power Gain — 18 dB
  Drain Efficiency — 32%
  IMD — -37 dBc
- Capable of Handling 10:1 VSWR, @ 28 Vdc, 960 MHz, 10 Watts CW Output Power

Features

- Characterized with Series Equivalent Large-Signal Impedance Parameters
- On-Chip RF Feedback for Broadband Stability
- Qualified Up to a Maximum of 32 V_{DD} Operation
- Integrated ESD Protection
- 225°C Capable Plastic Package
- RoHS Compliant
- In Tape and Reel. R1 Suffix = 500 Units per 24 mm, 13 inch Reel.

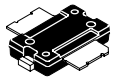

CASE 1265-09, STYLE 1
TO-270-2
PLASTIC
MW6S010NR1

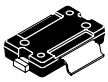

CASE 1265A-03, STYLE 1
TO-270-2 GULL
PLASTIC
MW6S010GNR1

Table 1. Maximum Ratings

Rating	Symbol	Value	Unit
Drain-Source Voltage	V_{DSS}	-0.5, +68	Vdc
Gate-Source Voltage	V_{GS}	-0.5, +12	Vdc
Storage Temperature Range	T_{stg}	- 65 to +150	°C
Case Operating Temperature	T_C	150	°C
Operating Junction Temperature (1,2)	T_J	225	°C

Table 2. Thermal Characteristics

Characteristic	Symbol	Value (2,3)	Unit
Thermal Resistance, Junction to Case Case Temperature 80°C, 10 W PEP	$R_{\theta JC}$	2.85	°C/W

1. Continuous use at maximum temperature will affect MTTF.
2. MTTF calculator available at http://www.freescale.com/rf. Select Software & Tools/Development Tools/Calculators to access MTTF calculators by product.
3. Refer to AN1955, *Thermal Measurement Methodology of RF Power Amplifiers.* Go to http://www.freescale.com/rf. Select Documentation/Application Notes - AN1955.

© Freescale Semiconductor, Inc., 2005-2006, 2008-2009. All rights reserved.

Table 3. ESD Protection Characteristics

Test Methodology	Class
Human Body Model (per JESD22-A114)	1A
Machine Model (per EIA/JESD22-A115)	A
Charge Device Model (per JESD22-C101)	III

Table 4. Moisture Sensitivity Level

Test Methodology	Rating	Package Peak Temperature	Unit
Per JESD22-A113, IPC/JEDEC J-STD-020	3	260	°C

Table 5. Electrical Characteristics (T_A = 25°C unless otherwise noted)

Characteristic	Symbol	Min	Typ	Max	Unit
Off Characteristics					
Zero Gate Voltage Drain Leakage Current (V_{DS} = 68 Vdc, V_{GS} = 0 Vdc)	I_{DSS}	—	—	10	μAdc
Zero Gate Voltage Drain Leakage Current (V_{DS} = 28 Vdc, V_{GS} = 0 Vdc)	I_{DSS}	—	—	1	μAdc
Gate-Source Leakage Current (V_{GS} = 5 Vdc, V_{DS} = 0 Vdc)	I_{GSS}	—	—	1	μAdc
On Characteristics					
Gate Threshold Voltage (V_{DS} = 10 Vdc, I_D = 100 μAdc)	$V_{GS(th)}$	1.5	2.3	3	Vdc
Gate Quiescent Voltage (V_{DD} = 28 Vdc, I_D = 125 mAdc, Measured in Functional Test)	$V_{GS(Q)}$	2	3.1	4	Vdc
Drain-Source On-Voltage (V_{GS} = 10 Vdc, I_D = 0.3 Adc)	$V_{DS(on)}$	—	0.27	0.35	Vdc
Dynamic Characteristics					
Reverse Transfer Capacitance (V_{DS} = 28 Vdc ± 30 mV(rms)ac @ 1 MHz, V_{GS} = 0 Vdc)	C_{rss}	—	0.32	—	pF
Output Capacitance (V_{DS} = 28 Vdc ± 30 mV(rms)ac @ 1 MHz, V_{GS} = 0 Vdc)	C_{oss}	—	10	—	pF
Input Capacitance (V_{DS} = 28 Vdc, V_{GS} = 0 Vdc ± 30 mV(rms)ac @ 1 MHz)	C_{iss}	—	23	—	pF
Functional Tests (In Freescale Test Fixture, 50 ohm system) V_{DD} = 28 Vdc, I_{DQ} = 125 mA, P_{out} = 10 W PEP, f = 960 MHz, Two-Tone Test, 100 kHz Tone Spacing					
Power Gain	G_{ps}	17.5	18	20.5	dB
Drain Efficiency	η_D	31	32	—	%
Intermodulation Distortion	IMD	—	-37	-33	dBc
Input Return Loss	IRL	—	-18	-10	dB
Typical Performances (In Freescale 450 MHz Demo Board, 50 ohm system) V_{DD} = 28 Vdc, I_{DQ} = 150 mA, P_{out} = 10 W PEP, 420-470 MHz, Two-Tone Test, 100 kHz Tone Spacing					
Power Gain	G_{ps}	—	20	—	dB
Drain Efficiency	η_D	—	33	—	%
Intermodulation Distortion	IMD	—	-40	—	dBc
Input Return Loss	IRL	—	-10	—	dB

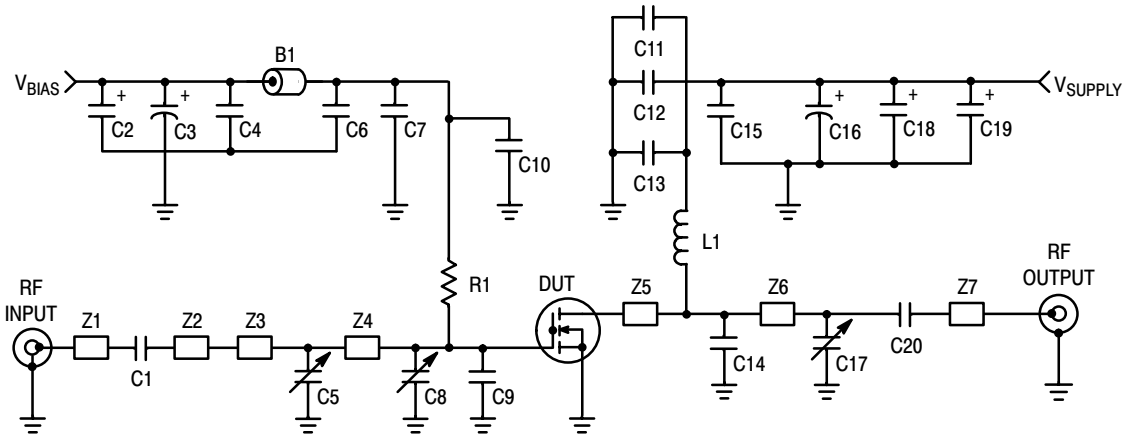

Z1	0.073″ x 0.223″ Microstrip	Z5	0.313″ x 0.902″ Microstrip
Z2	0.112″ x 0.070″ Microstrip	Z6	0.073″ x 1.080″ Microstrip
Z3	0.213″ x 0.500″ Microstrip	Z7	0.073″ x 0.314″ Microstrip
Z4	0.313″ x 1.503″ Microstrip	PCB	Rogers ULTRALAM 2000, 0.031″, ε_r = 2.55

Figure 1. MW6S010NR1(GNR1) Test Circuit Schematic — 900 MHz

Table 6. MW6S010NR1(GNR1) Test Circuit Component Designations and Values — 900 MHz

Part	Description	Part Number	Manufacturer
B1	Ferrite Bead	2743019447	Fair-Rite
C1, C6, C11, C20	47 pF Chip Capacitors	ATC100B470JT500XT	ATC
C2, C18, C19	22 μF, 35 V Tantalum Capacitors	T491D226K035AT	Kemet
C3, C16	220 μF, 63 V Electrolytic Capacitors, Radial	2222-136-68221	Vishay
C4, C15	0.1 μF Chip Capacitors	CDR33BX104AKWS	Kemet
C5, C8, C17	0.8-8.0 pF Variable Capacitors, Gigatrim	272915L	Johanson
C7, C12	24 pF Chip Capacitors	ATC100B240JT500XT	ATC
C9, C10, C13	6.8 pF Chip Capacitors	ATC100B6R8JT500XT	ATC
C14	7.5 pF Chip Capacitor	ATC100B7R5JT500XT	ATC
L1	12.5 nH Inductor	A04T-5	Coilcraft
R1	1 kΩ, 1/4 W Chip Resistor	CRCW12061001FKEA	Vishay

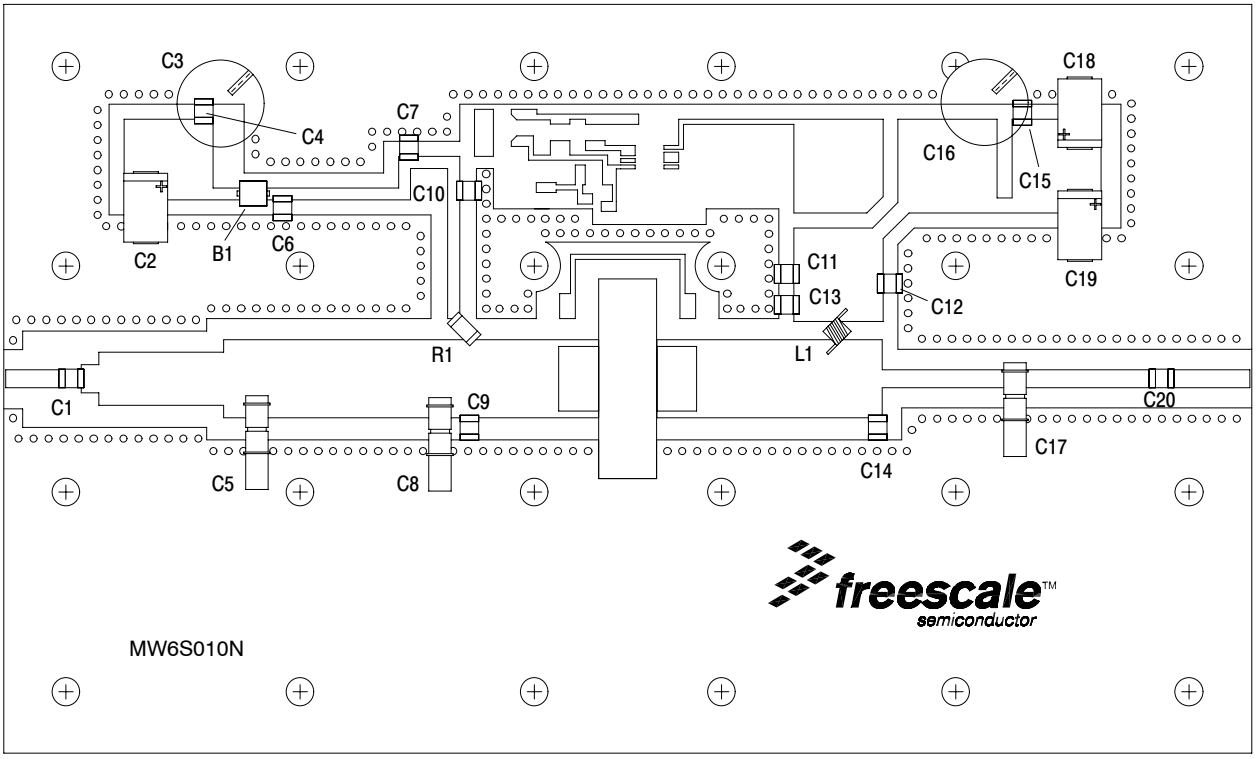

Figure 2. MW6S010NR1(GNR1) Test Circuit Component Layout — 900 MHz

TYPICAL CHARACTERISTICS — 900 MHz

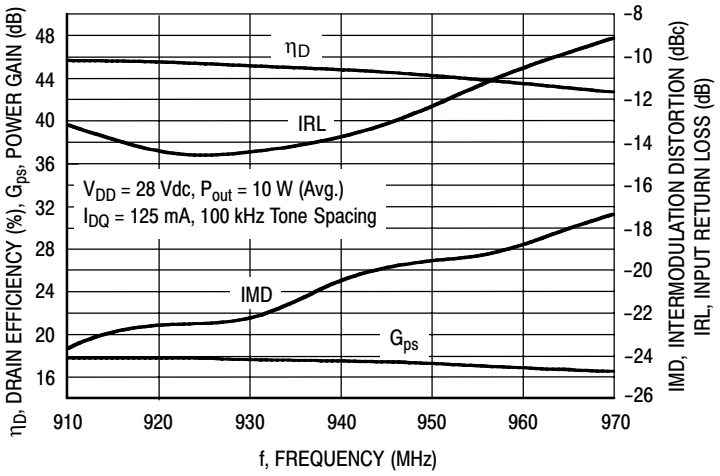

Figure 3. Two-Tone Wideband Performance @ P_{out} = 10 Watts

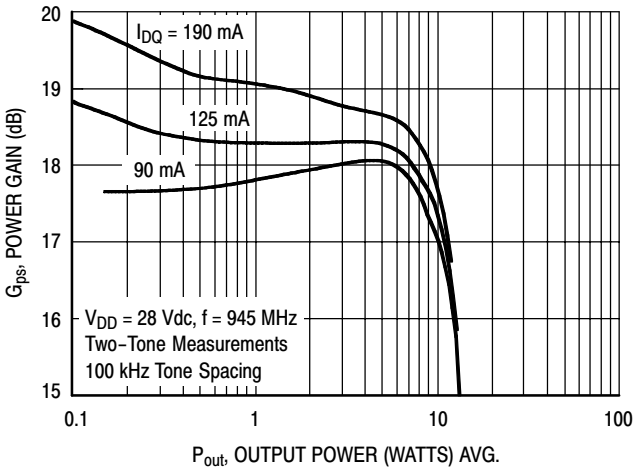

Figure 4. Two-Tone Power Gain versus Output Power

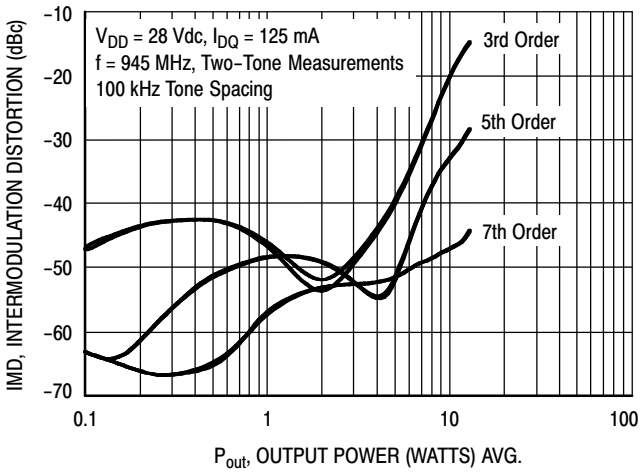

Figure 5. Intermodulation Distortion Products versus Output Power

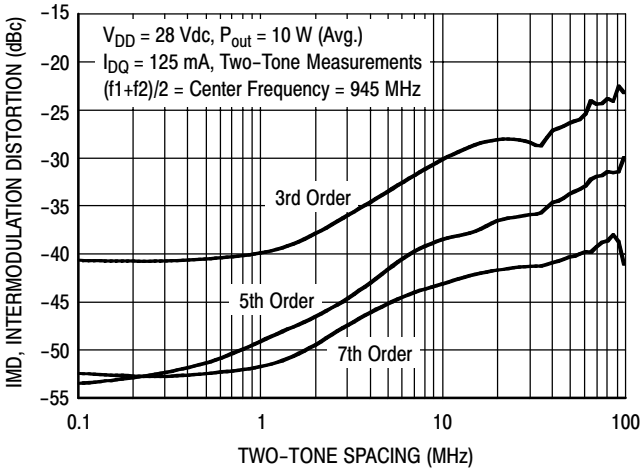

Figure 6. Intermodulation Distortion Products versus Tone Spacing

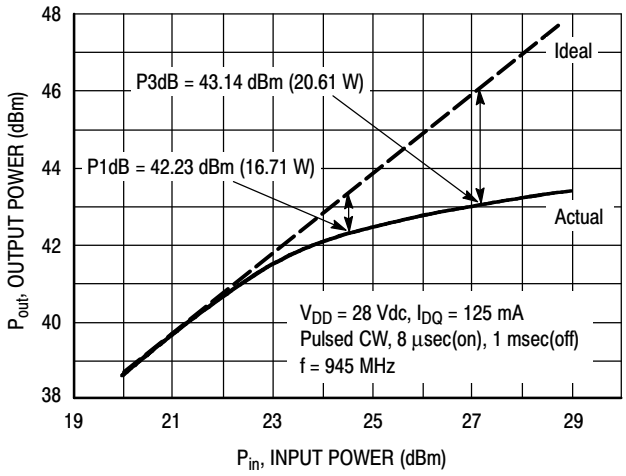

Figure 7. Pulse CW Output Power versus Input Power

TYPICAL CHARACTERISTICS — 900 MHz

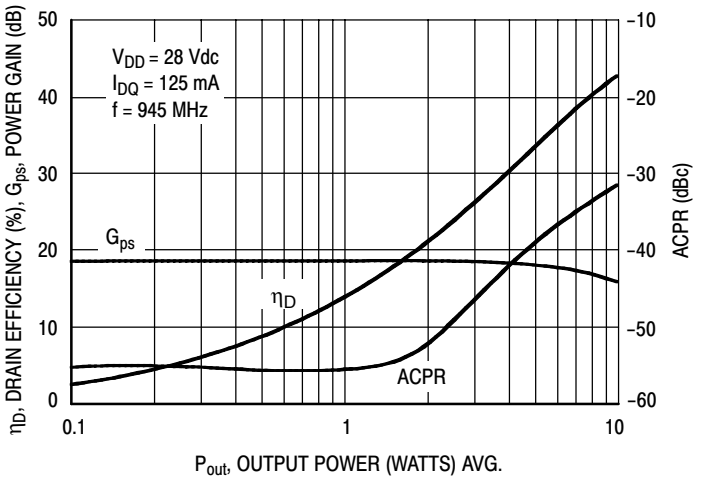

Figure 8. Single-Carrier CDMA ACPR, Power Gain and Power Added Efficiency versus Output Power

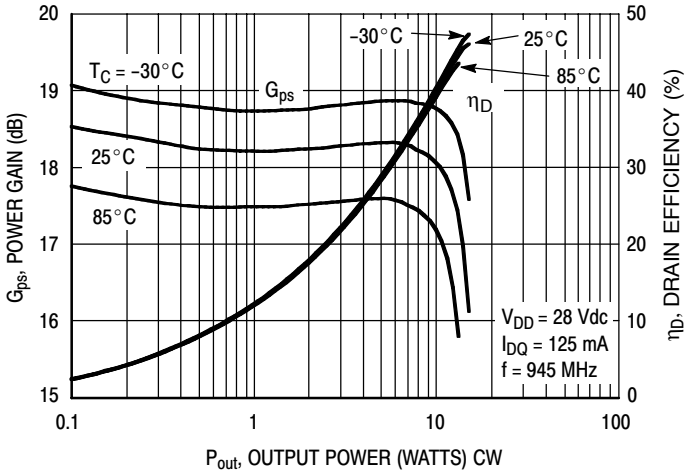

Figure 9. Power Gain and Power Added Efficiency versus Output Power

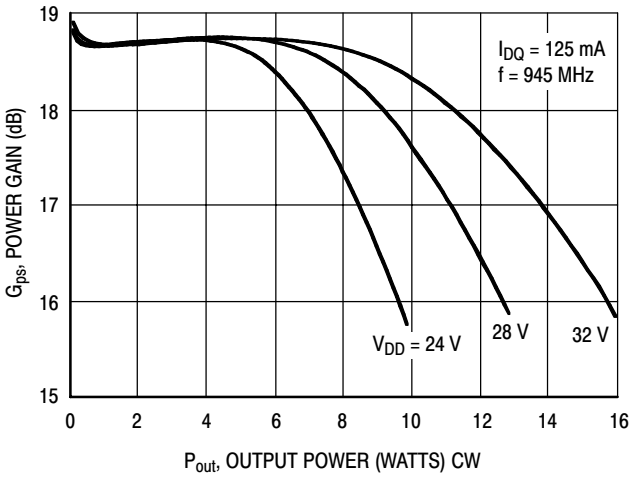

Figure 10. Power Gain versus Output Power

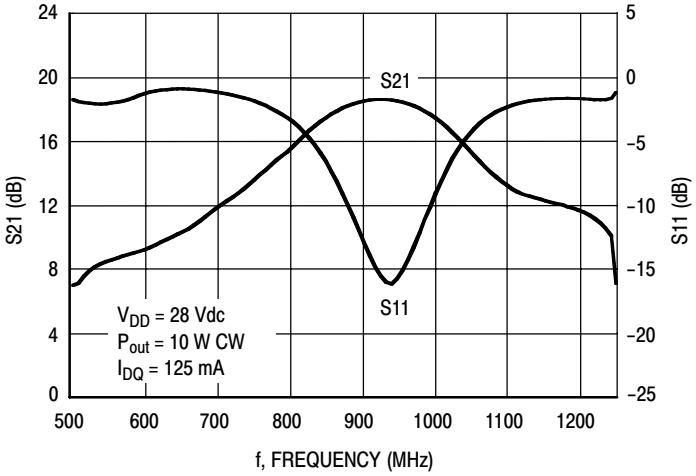

Figure 11. Broadband Frequency Response

TYPICAL CHARACTERISTICS

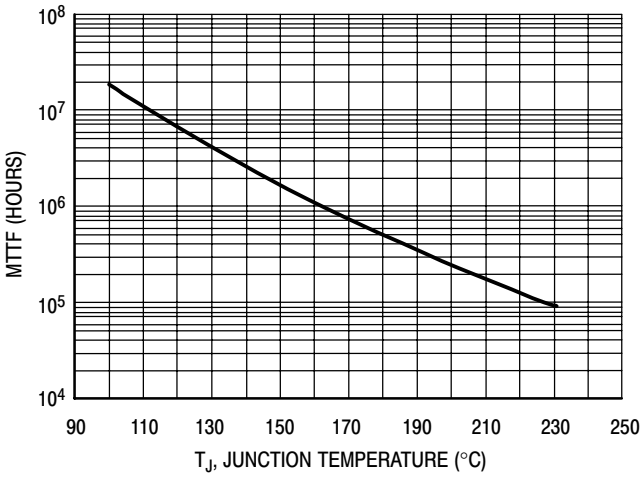

This above graph displays calculated MTTF in hours when the device is operated at V_{DD} = 28 Vdc, P_{out} = 10 W PEP, and η_D = 32%.

MTTF calculator available at http://www.freescale.com/rf. Select Software & Tools/Development Tools/Calculators to access MTTF calculators by product.

Figure 12. MTTF Factor versus Junction Temperature

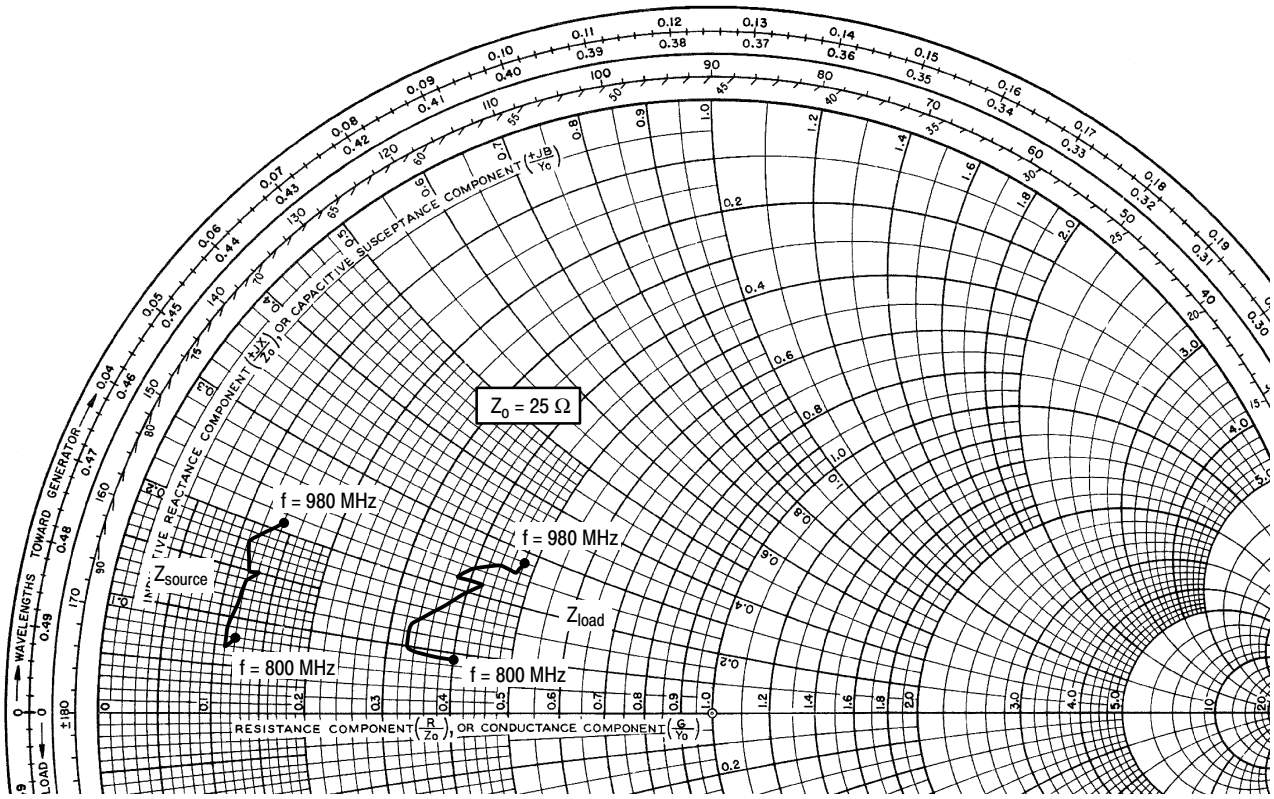

V_{DD} = 28 Vdc, I_{DQ} = 125 mA, P_{out} = 10 W PEP

f MHz	Z_{source} Ω	Z_{load} Ω
800	3.1 + j1.9	10.1 + j2.3
820	2.8 + j1.7	8.3 + j2.5
840	2.7 + j2.2	8.2 + j3.3
860	3.1 + j3.4	9.8 + j4.8
880	3.3 + j3.8	10.6 + j5.6
900	2.9 + j3.7	9.5 + j5.5
920	2.8 + j4.4	10.1 + j5.9
940	3.0 + j4.7	11.0 + j6.4
960	3.2 + j4.9	11.8 + j6.6
980	3.6 + j5.2	12.1 + j7.1

Z_{source} = Test circuit impedance as measured from gate to ground.

Z_{load} = Test circuit impedance as measured from drain to ground.

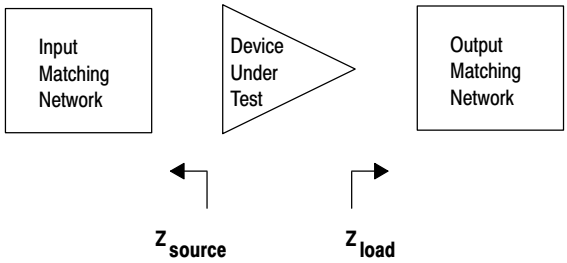

Figure 13. Series Equivalent Source and Load Impedance — 900 MHz

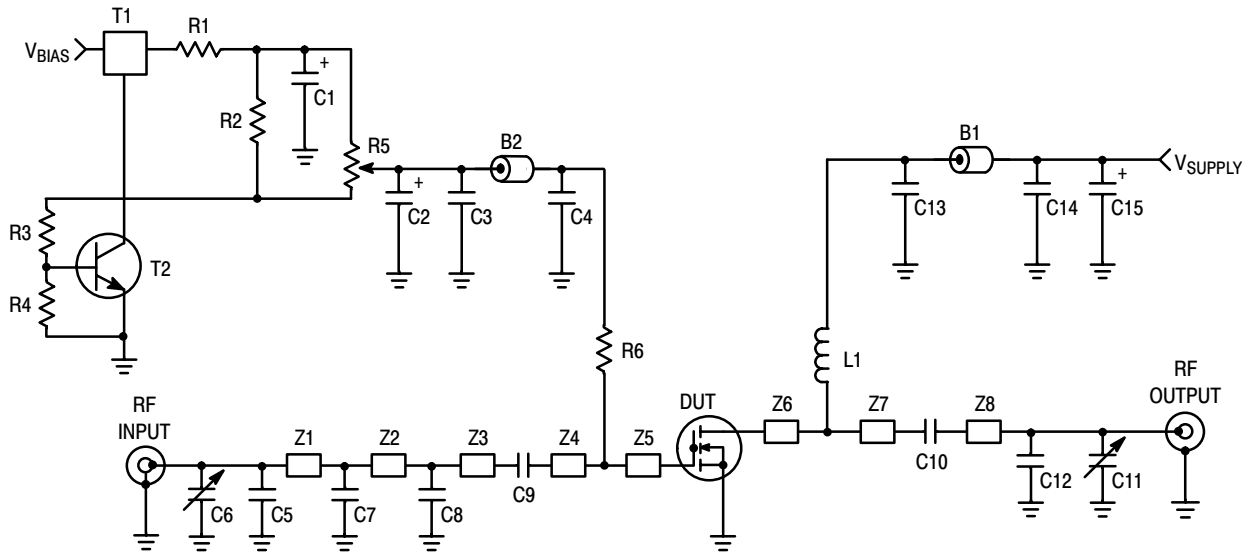

Z1	0.540″ x 0.080″ Microstrip	Z5	0.475″ x 0.330″ Microstrip
Z2	0.365″ x 0.080″ Microstrip	Z6	0.475″ x 0.325″ Microstrip
Z3	0.225″ x 0.080″ Microstrip	Z8	1.250″ x 0.080″ Microstrip
Z4, Z7	0.440″ x 0.080″ Microstrip	PCB	Rogers ULTRALAM 2000, 0.030″, ε_r = 2.55

Figure 14. MW6S010NR1(GNR1) Test Circuit Schematic — 450 MHz

Table 7. MW6S010NR1(GNR1) Test Circuit Component Designations and Values — 450 MHz

Part	Description	Part Number	Manufacturer
B1, B2	Ferrite Bead	2743019447	Fair-Rite
C1	1 μF, 35 V Tantalum Capacitor	T491C105K050AT	Kemet
C2, C15	22 μF, 35 V Tantalum Capacitors	T491X226K035AT	Kemet
C3, C14	0.1 μF Chip Capacitors	C1210C104K5RAC	Kemet
C4, C9, C10, C13	330 pF Chip Capacitors	ATC700A331JT150XT	ATC
C5	4.3 pF Chip Capacitor	ATC100B4R3JT500XT	ATC
C6, C11	0.6-8.0 pF Variable Capacitors	27291SL	Johanson
C7, C8, C12	4.7 pF Chip Capacitors	ATC100B4R7JT500XT	ATC
L1	39 μH Chip Inductor	ISC-1210	Vishay
R1	10 Ω Chip Resistor	CRCW080510R0FKEA	Vishay
R2	1 kΩ Chip Resistor	CRCW08051001FKEA	Vishay
R3	1.2 kΩ Chip Resistor	CRCW08051201FKEA	Vishay
R4	2.2 kΩ Chip Resistor	CRCW08052201FKEA	Vishay
R5	5 kΩ Potentiometer	1224W	Bourns
R6	1 kΩ Chip Resistor	CRCW12061001FKEA	Vishay
T1	5 Volt Regulator, Micro 8	LP2951CDMR2G	On Semiconductor
T2	NPN Transistor, SOT-23	BC847ALT1G	On Semiconductor

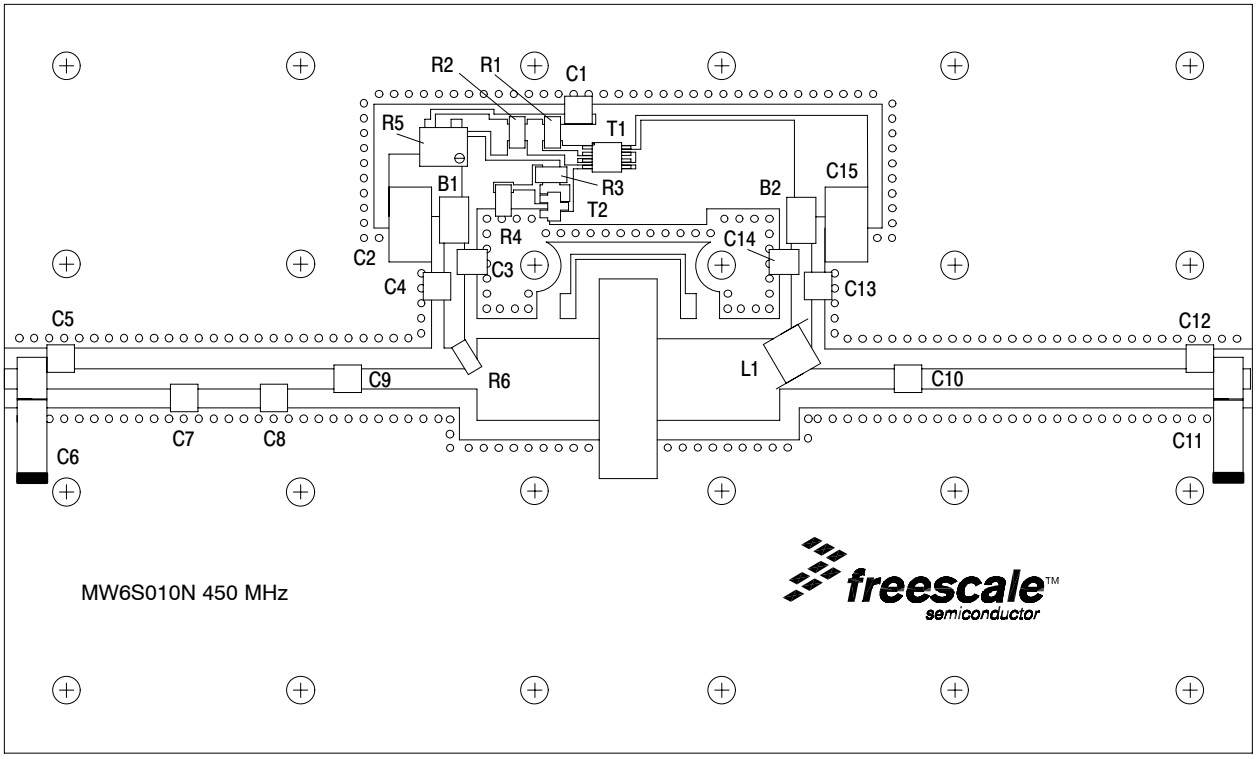

Figure 15. MW6S010NR1(GNR1) Test Circuit Component Layout — 450 MHz

TYPICAL CHARACTERISTICS — 450 MHz

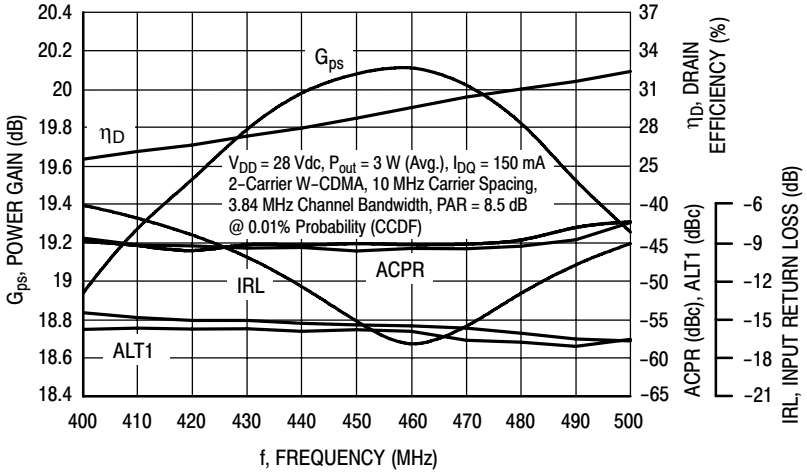

Figure 16. 2-Carrier W-CDMA Broadband Performance @ P_{out} = 3 Watts Avg.

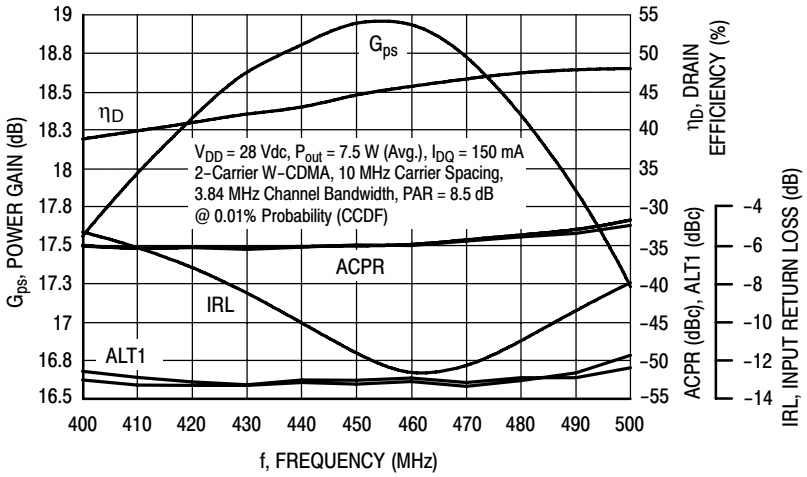

Figure 17. 2-Carrier W-CDMA Broadband Performance @ P_{out} = 7.5 Watts Avg.

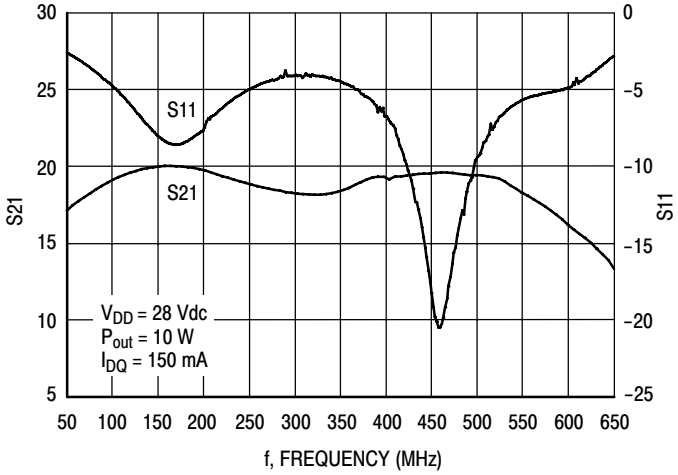

Figure 18. Broadband Frequency Response

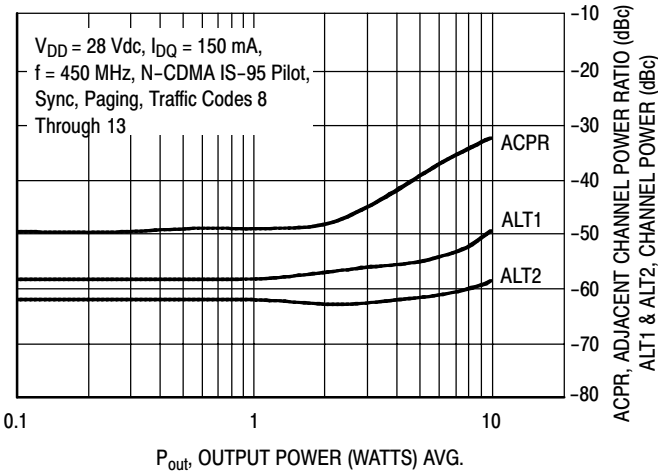

Figure 19. Single-Carrier N-CDMA ACPR, ALT1 and ALT2 versus Output Power

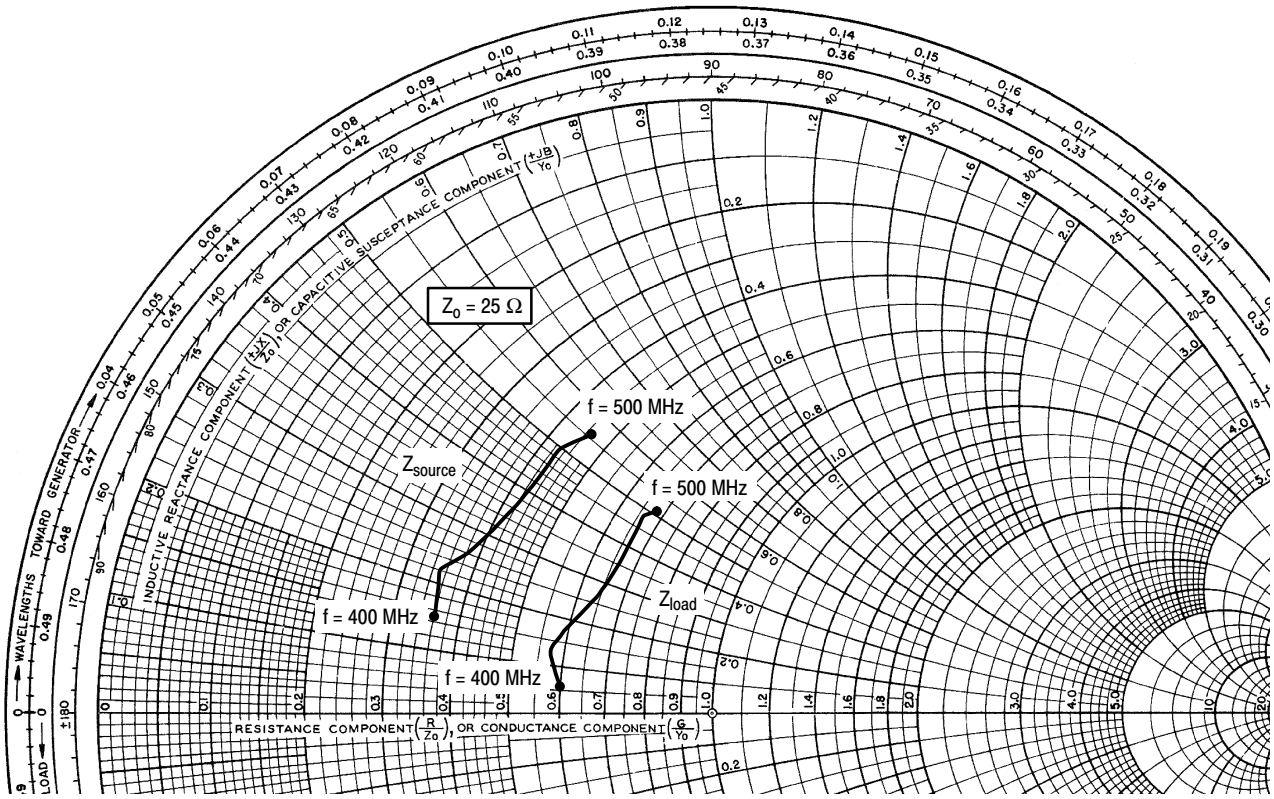

V_{DD} = 28 Vdc, I_{DQ} = 150 mA, P_{out} = 10 W PEP

f MHz	Z_{source} Ω	Z_{load} Ω
400	9.0 + j3.8	15.0 + j1.4
420	8.8 + j5.4	14.3 + j3.3
440	9.6 + j6.6	15.0 + j4.7
460	10.6 + j9.5	16.3 + j7.3
480	10.7 + j12.6	16.4 + j11.1
500	11.5 + j13.9	16.9 + j12.7

Z_{source} = Test circuit impedance as measured from gate to ground.

Z_{load} = Test circuit impedance as measured from drain to ground.

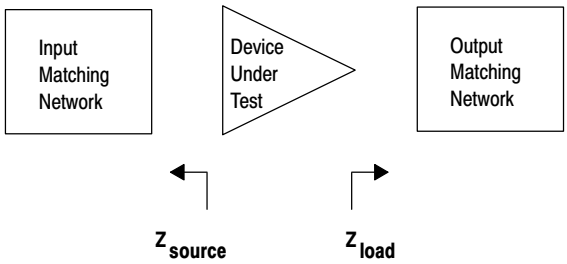

Figure 20. Series Equivalent Source and Load Impedance — 450 MHz

PACKAGE DIMENSIONS

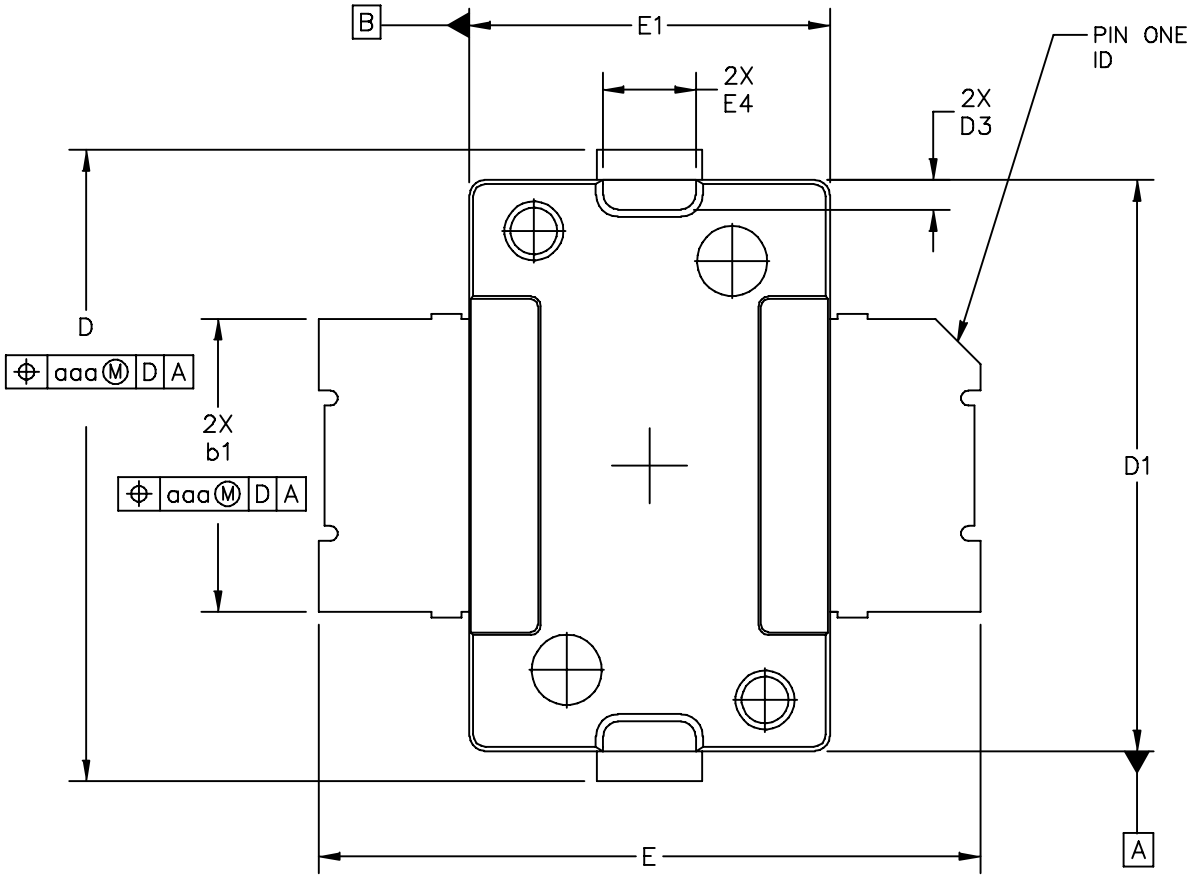

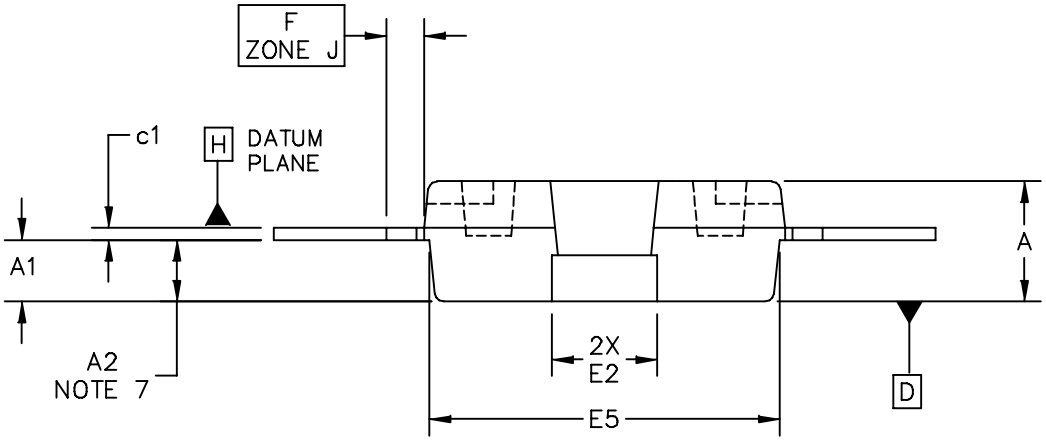

© FREESCALE SEMICONDUCTOR, INC. ALL RIGHTS RESERVED.	MECHANICAL OUTLINE	PRINT VERSION NOT TO SCALE
TITLE: TO–270 SURFACE MOUNT	DOCUMENT NO: 98ASH98117A	REV: K
	CASE NUMBER: 1265–09	29 JUN 2007
	STANDARD: JEDEC TO–270 AA	

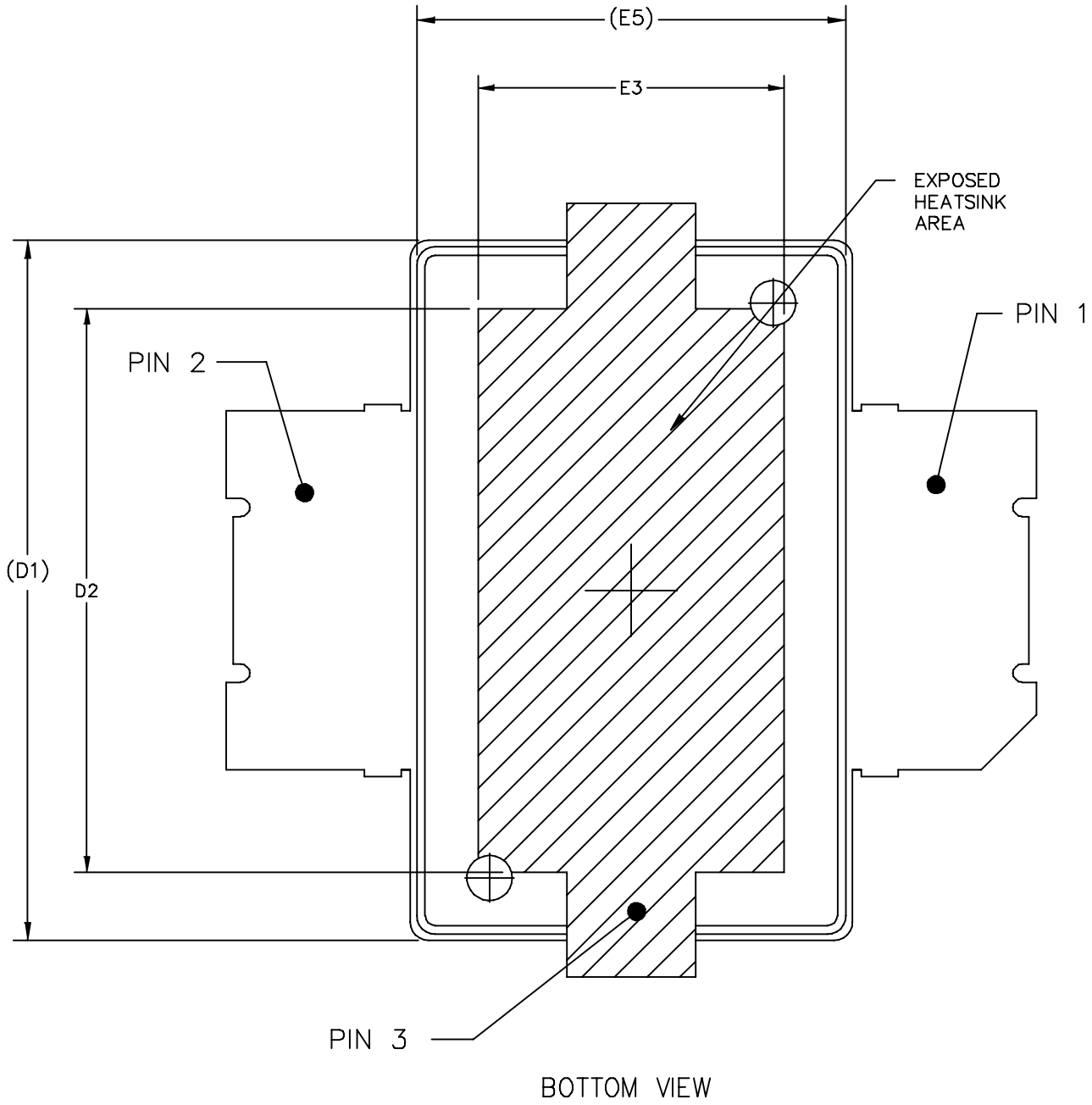

© FREESCALE SEMICONDUCTOR, INC. ALL RIGHTS RESERVED.	MECHANICAL OUTLINE	PRINT VERSION NOT TO SCALE
TITLE: TO–270 SURFACE MOUNT	DOCUMENT NO: 98ASH98117A	REV: K
	CASE NUMBER: 1265–09	29 JUN 2007
	STANDARD: JEDEC TO–270 AA	

NOTES:
1. CONTROLLING DIMENSION: INCH

2. INTERPRET DIMENSIONS AND TOLERANCES PER ASME Y14.5M–1994.

3. DATUM PLANE –H– IS LOCATED AT TOP OF LEAD AND IS COINCIDENT WITH THE LEAD WHERE THE LEAD EXITS THE PLASTIC BODY AT THE TOP OF THE PARTING LINE.

4. DIMENSIONS "D1" AND "E1" DO NOT INCLUDE MOLD PROTRUSION. ALLOWABLE PROTRUSION IS .006 PER SIDE. DIMENSIONS "D1 AND "E1" DO INCLUDE MOLD MISMATCH AND ARE DETERMINED AT DATUM PLANE –H–.

5. DIMENSION "b1" DOES NOT INCLUDE DAMBAR PROTRUSION. ALLOWABLE DAMBAR PROTRUSION SHALL BE .005 TOTAL IN EXCESS OF THE "b1" DIMENSION AT MAXIMUM MATERIAL CONDITION.

6. DATUMS –A– AND –B– TO BE DETERMINED AT DATUM PLANE –H–.

7. DIMENSION "A2" APPLIES WITHIN ZONE "J" ONLY.

8. DIMENSIONS "D" AND "E2" DO NOT INCLUDE MOLD PROTRUSION. OVERALL LENGTH INCLUDING MOLD PROTRUSION SHOULD NOT EXCEED 0.430 INCH FOR DIMENSION "D" AND 0.080 INCH FOR DIMENSION "E2". DIMENSIONS "D" AND "E2" DO INCLUDE MOLD MISMATCH AND ARE DETERMINED AT DATUM PLANE –D–.

STYLE 1:
PIN 1 – DRAIN
PIN 2 – GATE
PIN 3 – SOURCE

	INCH		MILLIMETER			INCH		MILLIMETER	
DIM	MIN	MAX	MIN	MAX	DIM	MIN	MAX	MIN	MAX
A	.078	.082	1.98	2.08	F	.025 BSC		0.64 BSC	
A1	.039	.043	0.99	1.09	b1	.193	.199	4.90	5.06
A2	.040	.042	1.02	1.07	c1	.007	.011	0.18	0.28
D	.416	.424	10.57	10.77	aaa	.004		0.10	
D1	.378	.382	9.60	9.70					
D2	.290	----	7.37	----					
D3	.016	.024	0.41	0.61					
E	.436	.444	11.07	11.28					
E1	.238	.242	6.04	6.15					
E2	.066	.074	1.68	1.88					
E3	.150	----	3.81	----					
E4	.058	.066	1.47	1.68					
E5	.231	.235	5.87	5.97					

© FREESCALE SEMICONDUCTOR, INC.
ALL RIGHTS RESERVED.

MECHANICAL OUTLINE | PRINT VERSION NOT TO SCALE

TITLE:
TO–270
SURFACE MOUNT

DOCUMENT NO: 98ASH98117A | REV: K
CASE NUMBER: 1265–09 | 29 JUN 2007
STANDARD: JEDEC TO–270 AA

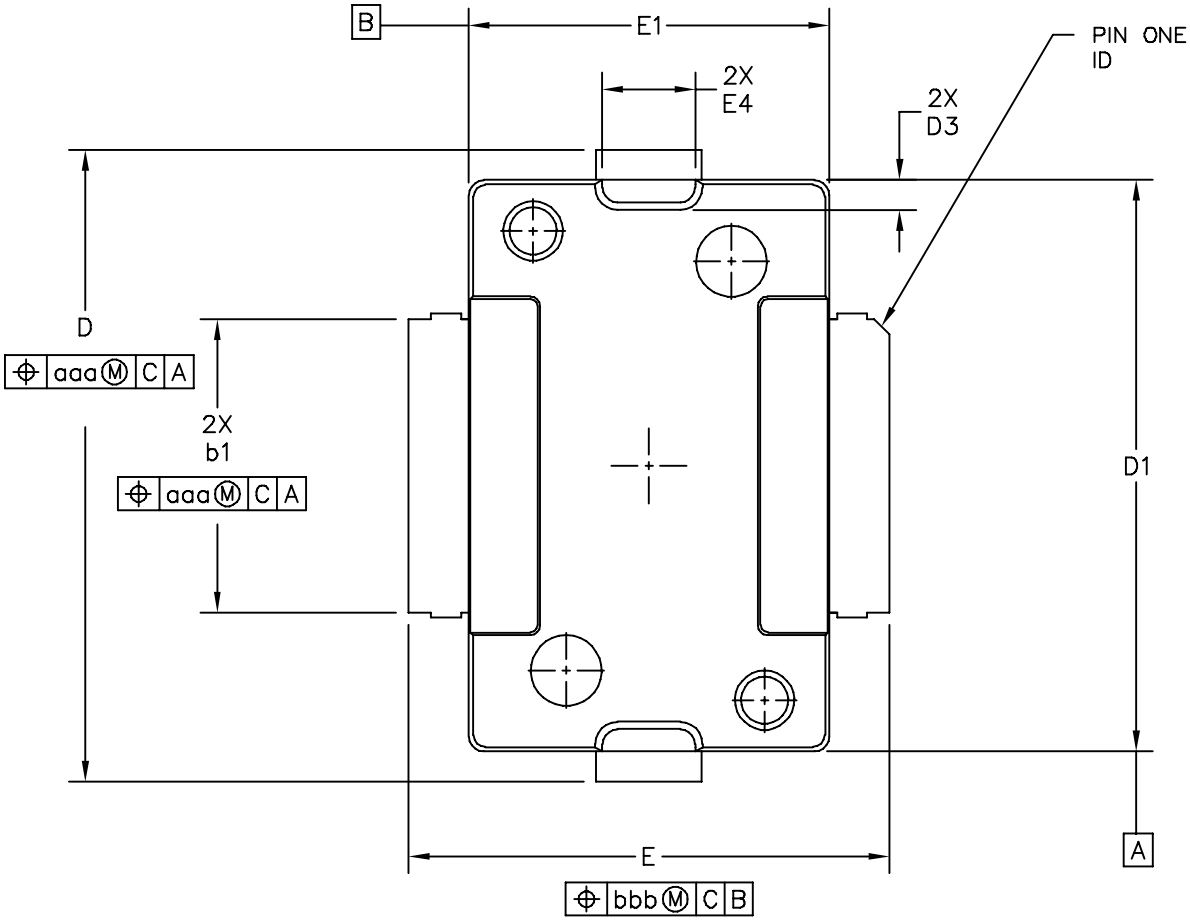

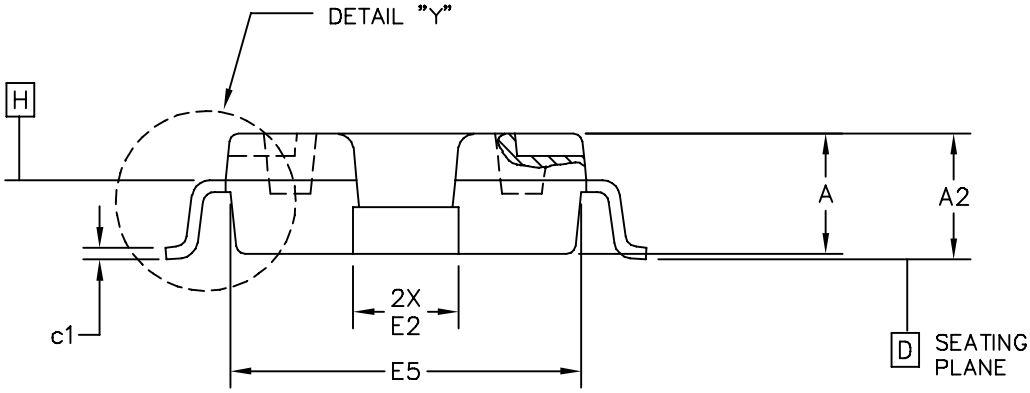

© FREESCALE SEMICONDUCTOR, INC. ALL RIGHTS RESERVED.	MECHANICAL OUTLINE	PRINT VERSION NOT TO SCALE
TITLE: TO–270 GULL WING	DOCUMENT NO: 98ASA99301D	REV: C
	CASE NUMBER: 1265A–03	02 JUL 2007
	STANDARD: JEDEC TO–270 BA	

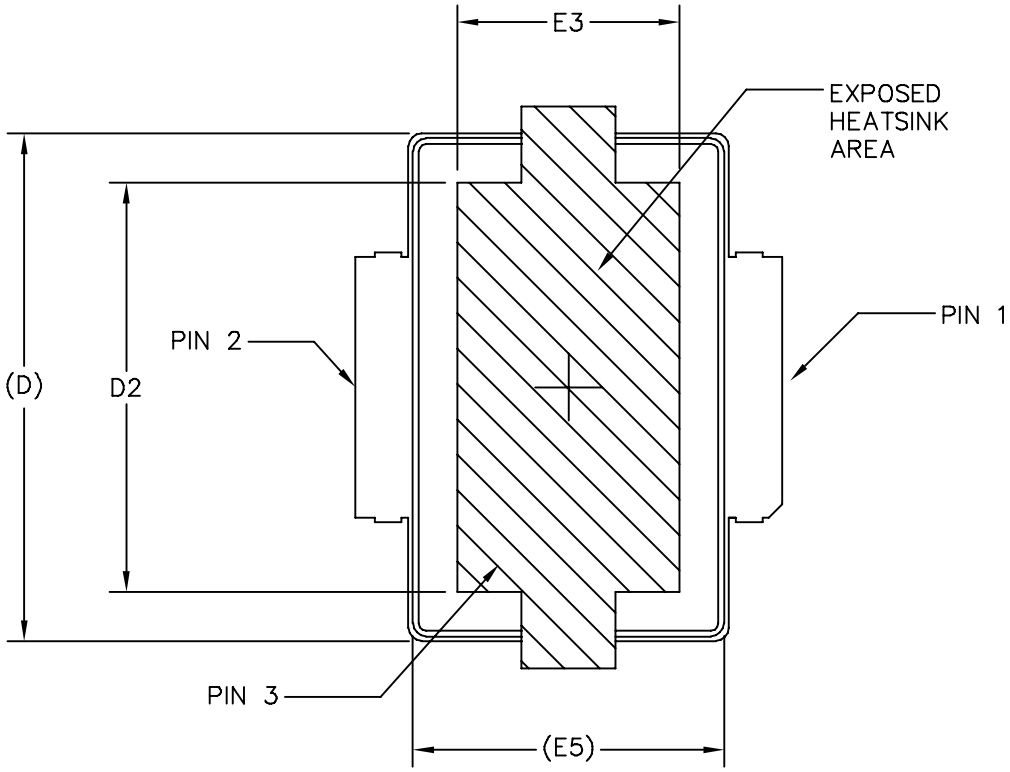

BOTTOM VIEW

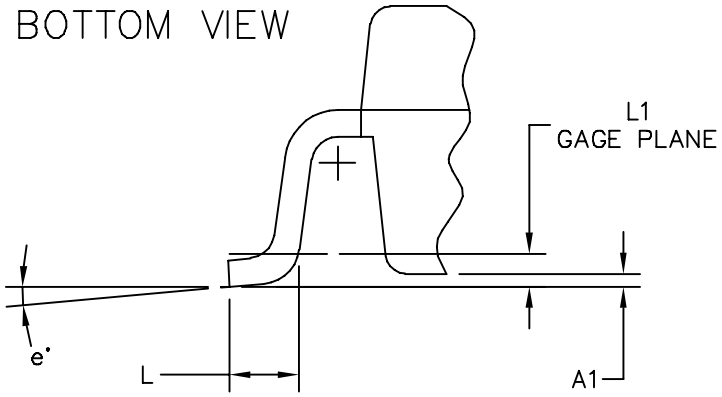

DETAIL "Y"

© FREESCALE SEMICONDUCTOR, INC. ALL RIGHTS RESERVED.	**MECHANICAL OUTLINE**	PRINT VERSION NOT TO SCALE

TITLE: TO–270 GULL WING	DOCUMENT NO: 98ASA99301D	REV: C
	CASE NUMBER: 1265A–03	02 JUL 2007
	STANDARD: JEDEC TO–270 BA	

NOTES:
1. CONTROLLING DIMENSION: INCH

2. INTERPRET DIMENSIONS AND TOLERANCES PER ASME Y14.5M–1994.

3. DATUM PLANE –H– IS LOCATED AT TOP OF LEAD AND IS COINCIDENT WITH THE LEAD WHERE THE LEAD EXITS THE PLASTIC BODY AT THE TOP OF THE PARTING LINE.

4. DIMENSIONS "D1" AND "E1" DO NOT INCLUDE MOLD PROTRUSION. ALLOWABLE PROTRUSION IS .006 PER SIDE. DIMENSIONS "D1 AND "E1" DO INCLUDE MOLD MISMATCH AND ARE DETERMINED AT DATUM PLANE –H–.

5. DIMENSION b1 DOES NOT INCLUDE DAMBAR PROTRUSION. ALLOWABLE DAMBAR PROTRUSION SHALL BE .005 TOTAL IN EXCESS OF THE b1 DIMENSION AT MAXIMUM MATERIAL CONDITION.

6. DATUMS –A– AND –B– TO BE DETERMINED AT DATUM PLANE –H–.

7. DIMENSIONS "D" AND "E2" DO NOT INCLUDE MOLD PROTRUSION. ALLOWABLE PROTRUSION IS .003 PER SIDE. DIMENSIONS "D AND "E2" DO INCLUDE MOLD MISMATCH AND ARE DETERMINED AT DATUM PLANE –D–.

STYLE 1:
PIN 1 – DRAIN
PIN 2 – GATE
PIN 3 – SOURCE

DIM	INCH MIN	INCH MAX	MILLIMETER MIN	MILLIMETER MAX	DIM	INCH MIN	INCH MAX	MILLIMETER MIN	MILLIMETER MAX
A	.078	.082	1.98	2.08	L	.018	.024	0.46	0.61
A1	.001	.004	0.02	0.10	L1	.01 BSC		0.25 BSC	
A2	.077	.088	1.96	2.24	b1	.193	.199	4.90	5.06
D	.416	.424	10.57	10.77	c1	.007	.011	0.18	0.28
D1	.378	.382	9.60	9.70	e	2°	8°	2°	8°
D2	.290	–	7.37	–	aaa	.004		0.10	
D3	.016	.024	0.41	0.61					
E	.316	.324	8.03	8.23					
E1	.238	.242	6.04	6.15					
E2	.066	.074	1.68	1.88					
E3	.150	–	3.81	–					
E4	.058	.066	1.47	1.68					
E5	.231	.235	5.87	5.97					

© FREESCALE SEMICONDUCTOR, INC.
ALL RIGHTS RESERVED.

MECHANICAL OUTLINE | PRINT VERSION NOT TO SCALE

TITLE:	DOCUMENT NO: 98ASA99301D	REV: C
TO–270 GULL WING	CASE NUMBER: 1265A–03	02 JUL 2007
	STANDARD: JEDEC TO–270 BA	

PRODUCT DOCUMENTATION, TOOLS AND SOFTWARE

Refer to the following documents to aid your design process.

Application Notes

- AN1907: Solder Reflow Attach Method for High Power RF Devices in Plastic Packages
- AN1949: Mounting Method for the MHVIC910HR2 (PFP-16) and Similar Surface Mount Packages
- AN1955: Thermal Measurement Methodology of RF Power Amplifiers
- AN3789: Clamping of High Power RF Transistors and RFICs in Over-Molded Plastic Packages

Engineering Bulletins

- EB212: Using Data Sheet Impedances for RF LDMOS Devices

Software

- Electromigration MTTF Calculator
- RF High Power Model

For Software and Tools, do a Part Number search at http://www.freescale.com, and select the “Part Number” link. Go to the Software & Tools tab on the part’s Product Summary page to download the respective tool.

REVISION HISTORY

The following table summarizes revisions to this document.

Revision	Date	Description
4	Dec. 2008	• Changed Storage Temperature Range in Max Ratings table from -65 to +175 to -65 to +150 for standardization across products, p. 1 • Removed Total Device Dissipation from Max Ratings table as data was redundant (information already provided in Thermal Characteristics table), p. 1 • Added Case Operating Temperature limit to the Maximum Ratings table and set limit to 150°C, p. 1 • Operating Junction Temperature increased from 200°C to 225°C in Maximum Ratings table, related “Continuous use at maximum temperature will affect MTTF” footnote added and changed 200°C to 225°C in Capable Plastic Package bullet, p. 1 • Corrected V_{DS} to V_{DD} in the RF test condition voltage callout for $V_{GS(Q)}$ and added “Measured in Functional Test”, On Characteristics table, p. 2 • Corrected C_{iss} test condition to indicate AC stimulus on the V_{GS} connection versus the V_{DS} connection, Dynamic Characteristics table, p. 2 • Updated Part Numbers in Tables 6, 7, Component Designations and Values, to RoHS compliant part numbers, p. 3, 9 • Removed lower voltage tests from Fig. 10, Power Gain versus Output Power, due to fixed tuned fixture limitations, p. 6 • Replaced Fig. 12, MTTF versus Junction Temperature with updated graph. Removed $Amps^2$ and listed operating characteristics and location of MTTF calculator for device, p. 7 • Replaced Case Outline 1265-08 with 1265-09, Issue K, p. 1, 13-15. Corrected cross hatch pattern in bottom view and changed its dimensions (D2 and E3) to minimum value on source contact (D2 changed from Min-Max .290-.320 to .290 Min; E3 changed from Min-Max .150-.180 to .150 Min). Added JEDEC Standard Package Number. • Replaced Case Outline 1265A-02 with 1265A-03, Issue C, p. 1, 16-18. Corrected cross hatch pattern and its dimensions (D2 and E2) on source contact (D2 changed from Min-Max .290-.320 to .290 Min; E3 changed from Min-Max .150-.180 to .150 Min). Added pin numbers. Corrected mm dimension L for gull-wing foot from 4.90-5.06 Min-Max to 0.46-0.61 Min-Max. Added JEDEC Standard Package Number. • Added Product Documentation and Revision History, p. 19
5	June 2009	• Modified data sheet to reflect MSL rating change from 1 to 3 as a result of the standardization of packing process as described in Product and Process Change Notification number, PCN13516, p. 2 • Added AN3789, Clamping of High Power RF Transistors and RFICs in Over-Molded Plastic Packages to Product Documentation, Application Notes, p. 19 • Added Electromigration MTTF Calculator and RF High Power Model availability to Product Software, p. 19

How to Reach Us:

Home Page:
www.freescale.com

Web Support:
http://www.freescale.com/support

USA/Europe or Locations Not Listed:
Freescale Semiconductor, Inc.
Technical Information Center, EL516
2100 East Elliot Road
Tempe, Arizona 85284
1-800-521-6274 or +1-480-768-2130
www.freescale.com/support

Europe, Middle East, and Africa:
Freescale Halbleiter Deutschland GmbH
Technical Information Center
Schatzbogen 7
81829 Muenchen, Germany
+44 1296 380 456 (English)
+46 8 52200080 (English)
+49 89 92103 559 (German)
+33 1 69 35 48 48 (French)
www.freescale.com/support

Japan:
Freescale Semiconductor Japan Ltd.
Headquarters
ARCO Tower 15F
1-8-1, Shimo-Meguro, Meguro-ku,
Tokyo 153-0064
Japan
0120 191014 or +81 3 5437 9125
support.japan@freescale.com

Asia/Pacific:
Freescale Semiconductor China Ltd.
Exchange Building 23F
No. 118 Jianguo Road
Chaoyang District
Beijing 100022
China
+86 10 5879 8000
support.asia@freescale.com

For Literature Requests Only:
Freescale Semiconductor Literature Distribution Center
1-800-441-2447 or +1-303-675-2140
Fax: +1-303-675-2150
LDCForFreescaleSemiconductor@hibbertgroup.com

Information in this document is provided solely to enable system and software implementers to use Freescale Semiconductor products. There are no express or implied copyright licenses granted hereunder to design or fabricate any integrated circuits or integrated circuits based on the information in this document.

Freescale Semiconductor reserves the right to make changes without further notice to any products herein. Freescale Semiconductor makes no warranty, representation or guarantee regarding the suitability of its products for any particular purpose, nor does Freescale Semiconductor assume any liability arising out of the application or use of any product or circuit, and specifically disclaims any and all liability, including without limitation consequential or incidental damages. “Typical” parameters that may be provided in Freescale Semiconductor data sheets and/or specifications can and do vary in different applications and actual performance may vary over time. All operating parameters, including “Typicals”, must be validated for each customer application by customer’s technical experts. Freescale Semiconductor does not convey any license under its patent rights nor the rights of others. Freescale Semiconductor products are not designed, intended, or authorized for use as components in systems intended for surgical implant into the body, or other applications intended to support or sustain life, or for any other application in which the failure of the Freescale Semiconductor product could create a situation where personal injury or death may occur. Should Buyer purchase or use Freescale Semiconductor products for any such unintended or unauthorized application, Buyer shall indemnify and hold Freescale Semiconductor and its officers, employees, subsidiaries, affiliates, and distributors harmless against all claims, costs, damages, and expenses, and reasonable attorney fees arising out of, directly or indirectly, any claim of personal injury or death associated with such unintended or unauthorized use, even if such claim alleges that Freescale Semiconductor was negligent regarding the design or manufacture of the part.

Freescale™ and the Freescale logo are trademarks of Freescale Semiconductor, Inc.
All other product or service names are the property of their respective owners.
© Freescale Semiconductor, Inc. 2005-2006, 2008-2009. All rights reserved.

Document Number: MW6S010N
Rev. 5, 6/2009