Fine Inductors

Fastron

RoHS Compliant

www.fastrongroup.com

1008 AS

Engineer's Kit : EK-1008AS-X

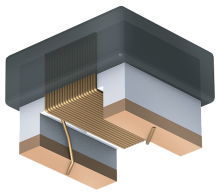

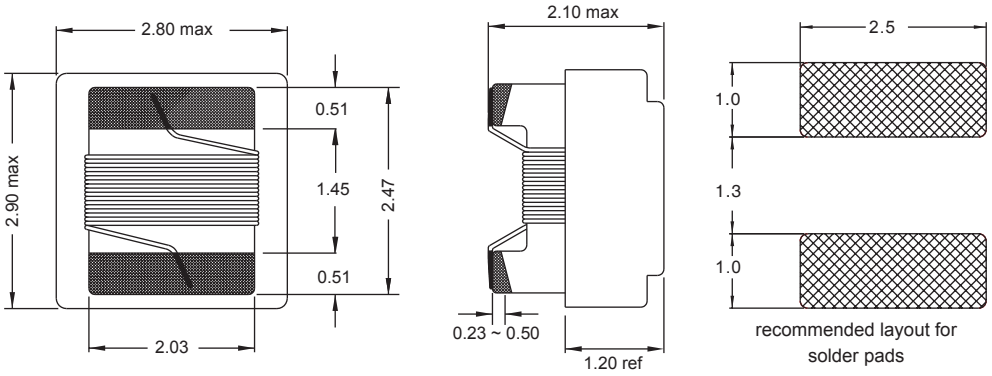

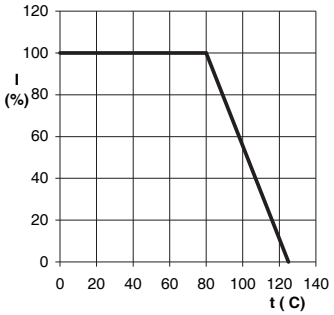

Current carrying capacity dependent on the ambient temperature

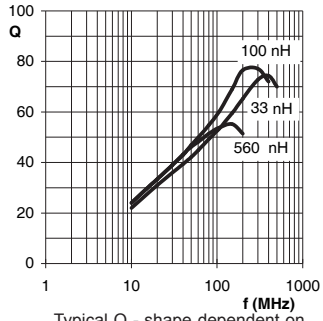

Typical Q - shape dependent on frequency

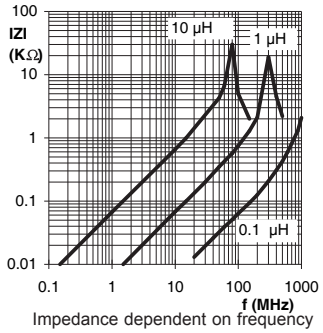

Impedance dependent on frequency

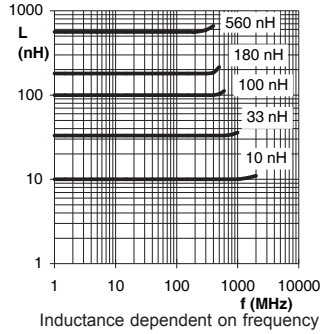

Inductance dependent on frequency

Part No	Inductance L (nH)	f_L (MHz)	Tol ± (%)	Q min	f_Q (MHz)	SRF[1] (MHz)	DCR max (Ω)	Rated DC Current (mA)
1008AS-4N7J-01	4.7	50	5	17	500	6000	0.15	600
1008AS-8N2J-01	8.2	50	5	70	1000	5000	0.08	600
1008AS-010J-01	10	50	5	50	500	4100	0.08	1000
1008AS-012J-01	12	50	5	53	500	3300	0.09	1000
1008AS-015J-01	15	50	5	70	500	2500	0.10	1000
1008AS-018J-01	18	50	5	50	350	2500	0.11	1000
1008AS-022J-01	22	50	5	55	350	2400	0.12	1000
1008AS-027J-01	27	50	5	58	350	1600	0.13	1000
1008AS-030J-01	30	50	5	65	350	1600	0.14	1000
1008AS-033J-01	33	50	5	65	350	1600	0.14	1000
1008AS-039J-01	39	50	5	60	350	1500	0.15	1000
1008AS-047J-01	47	50	5	65	350	1500	0.16	1000
1008AS-056J-01	56	50	5	65	350	1300	0.18	1000
1008AS-068J-01	68	50	5	67	350	1300	0.20	1000
1008AS-082J-01	82	50	5	63	350	1000	0.22	1000
1008AS-090J-01	90	50	5	60	350	1000	0.56	650
1008AS-R10J-01	100	25	5	63	350	1000	0.56	650
1008AS-R12J-01	120	25	5	60	350	950	0.63	650
1008AS-R15J-01	150	25	5	50	100	850	0.70	620
1008AS-R18J-01	180	25	5	45	100	750	0.77	620
1008AS-R22J-01	220	25	5	46	100	700	0.84	620
1008AS-R24J-01	240	25	5	46	100	600	0.84	600
1008AS-R27J-01	270	25	5	48	100	600	0.91	500
1008AS-R30J-01	300	25	5	45	100	600	0.91	500
1008AS-R33J-01	330	25	5	51	100	570	1.05	470
1008AS-R39J-01	390	25	5	47	100	500	1.12	470
1008AS-R47J-01	470	25	5	54	100	450	1.19	470
1008AS-R51J-01	510	25	5	51	100	415	1.33	400
1008AS-R56J-01	560	25	5	56	100	415	1.33	400
1008AS-R62J-01	620	25	5	49	100	375	1.40	400
1008AS-R68J-01	680	25	5	46	100	375	1.47	400
1008AS-R75J-01	750	25	5	46	100	360	1.54	400
1008AS-R82J-01	820	25	5	52	100	350	1.61	600
1008AS-R91K-01	910	25	10	37	50	320	1.68	380
1008AS-1R0K-01	1000	25	10	36	50	290	1.75	370
1008AS-1R1K-01	1100	25	10	35	50	250	1.85	350
1008AS-1R2K-01	1200	7.9	10	35	50	250	2.00	310
1008AS-1R4K-01	1400	7.9	10	33	50	200	2.30	330
1008AS-1R5K-01	1500	7.9	10	35	50	200	2.30	330
1008AS-1R8K-01	1800	7.9	10	34	50	160	2.60	300
1008AS-2R2K-01	2200	7.9	10	28	50	160	2.80	280
1008AS-2R7K-01	2700	7.9	10	23	25	140	4.80	120
1008AS-3R3K-01	3300	7.9	10	22	25	110	5.10	120
1008AS-3R9K-01	3900	7.9	10	27	25	100	5.40	110
1008AS-4R7K-01	4700	7.9	10	20	25	65	6.00	110
1008AS-5R0K-01	5000	7.9	10	20	25	60	6.60	110
1008AS-5R6K-01	5600	7.9	10	22	7.9	55	6.50	110
1008AS-6R8K-01	6800	7.9	10	22	7.9	48	7.50	110
1008AS-8R2K-01	8200	7.9	10	24	7.9	44	8.40	110
1008AS-100K-01	10000	7.9	10	20	7.9	40	8.40	110
1008AS-120K-01	12000	7.9	10	20	7.9	30	11.5	136

Material : Ceramic **SPQ :** Reel 2000 [-01]
7500 [-04]

Remarks: - For not listed inductance values please check availability with us.
- 2% and 5% tolerance available on request.
- **SRF[1] :** 4.7nH to 820nH = **SRF** min
: 910nH to 12000nH = **SRF** typ

● All dimensions in mm

Chip Inductors (wire wound - open)