SHEET OF

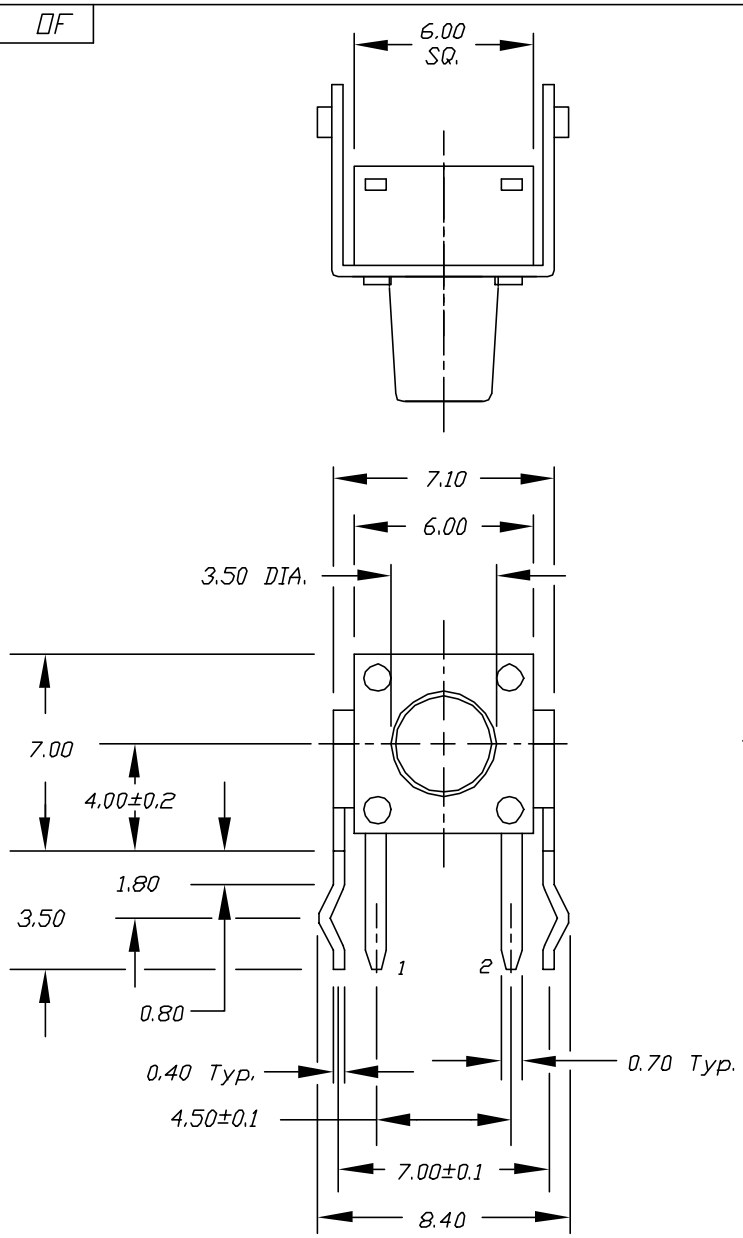

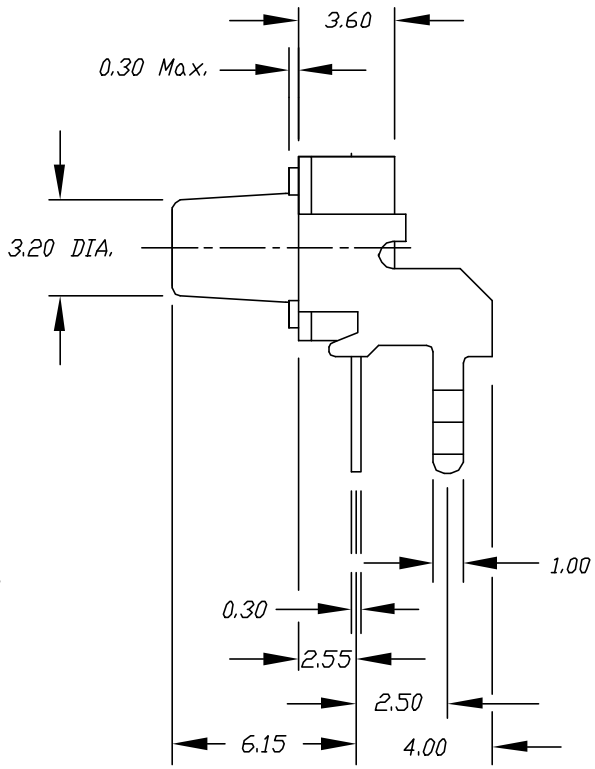

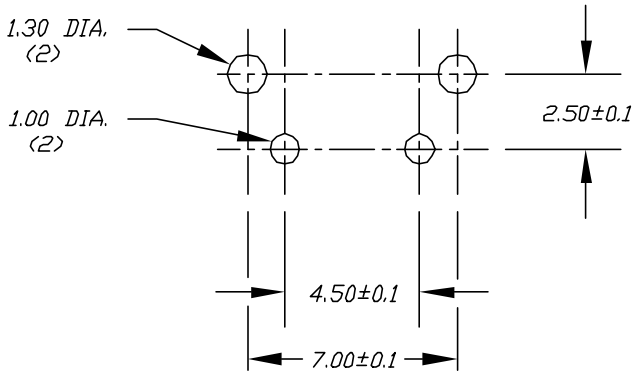

RECOMMEND P.C.B. LAYOUT

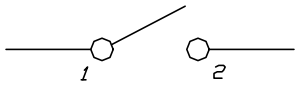

CIRCUIT: SPST

CONTACT CONFIGURATION

NOTES:

1. ALL DIMENSIONS IN MM
2. TERM. NOS. FOR REF ONLY
3. RATING: 50mA, 12V DC
4. TRAVEL: 0.25±0.1mm

REV.	DESCRIPTION	DATE	CHKD
A	RELEASED FOR PRODUCTION		

THE INFORMATION CONTAINED IN THIS DOCUMENT IS PROPRIETARY TO E-SWITCH AND IS NOT TO BE COPIED OR TRANSFERRED

TOLERANCES: ±0.4 ±0.25 / 0.0 0.00

E-SWITCH®

TITLE: TL 1105 R F160 Q (STD. BRACKET)

SCALE	DATE	DR	DWG	REV
4:1	2/2/98	MM	P020222	A