DEGSON ELECTRONICS CO., LTD.

Product Specification

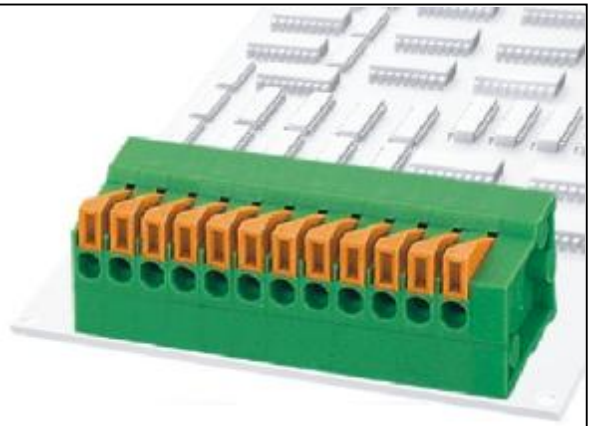

DG141R-2.54

Approval		
Electrical		
Standard	**UL**	**IEC**
Rated voltage	150V	130V
Rated current	2A	6A
Wire range	24-20AWG	0.2-1.0mm²
Withstanding voltage	AC1250V/1Min	
Mechanical		
Ambient temperature	-40℃~+105 ℃	
Strip length	11mm	
Dimensions		
Pitch	2.54mm(.100″)	
Poles	1P-XXP	
Material		
Housing	PA66+5%GF,UL94V-0	
Pin header	Brass,Tin plated	
Wire guard	Stainless steel	

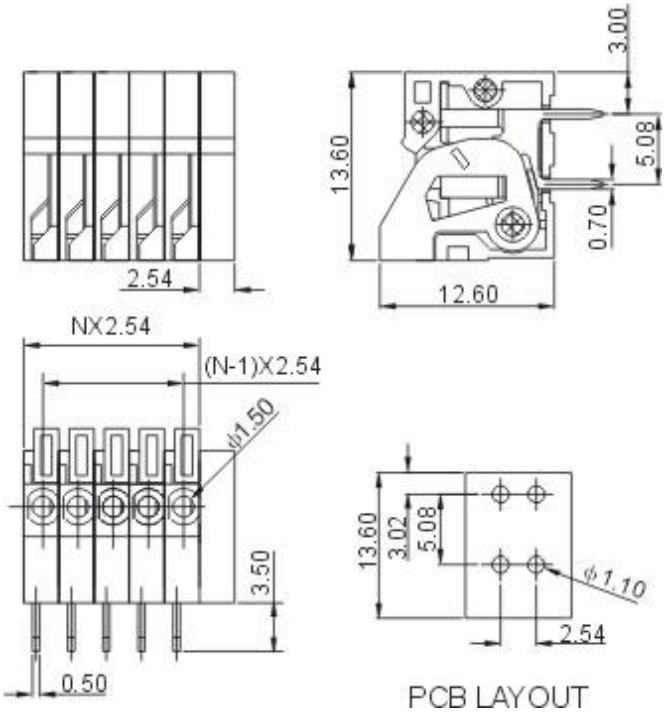

HOW TO ORDER :

[ ] – [ ][ ] P — 1 [ ] — X X X (Customer Request)

Series number

No.of pole

1	Single pitch
2	Double pitch

Color

1	Grey	4	Green	7	Trans Parent
2	Blue	5	Orange	8	Yellow
3	Black	6	Red	9	White

mm (INCH)	DEGSON ELECTRONICS CO., LTD.
THIROANGLE PROJECTION	NAME DG141R-2.54