D1RFRD006

REVISION RECORD				
REV	ECN	DESCRIPTION	DRFT	DATE
1	09-0123	增加UL刻字参数	Mickey	11/07/09
2	10-0263	避专利结构变更	Jordan.Y	08/24/10

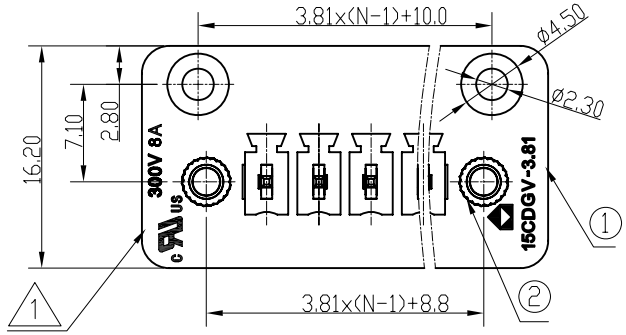

Notes:

1. Pitch:3.81mm ,Poles:2-24P
2. Rated voltage/current:UL1059 300V/8A
   IEC 160V/8A
3. Operation temperatures:-40℃～+105℃
4. Withstanding Voltage:AC2000V/1Min
5. Insulation Resistance:5000MΩ/DC1000V
6. Wire Range:28-16AWG,1.5mm²
7. Max.Torque Value:M2.5,4.08kgf.cm
8. Undimensioned Tolerances:

Pitch range in mm			Naminal dimension range in mm					—
to 6	over 6 to 10	over 10 to 24	to 30	over 30 to 60	over 60 to 100	over 100 to 150	over 150	⌒ ▱
±0.10	±0.15	±0.25	±0.2	±0.3	±0.5	±0.7	±1.0	0.05/10

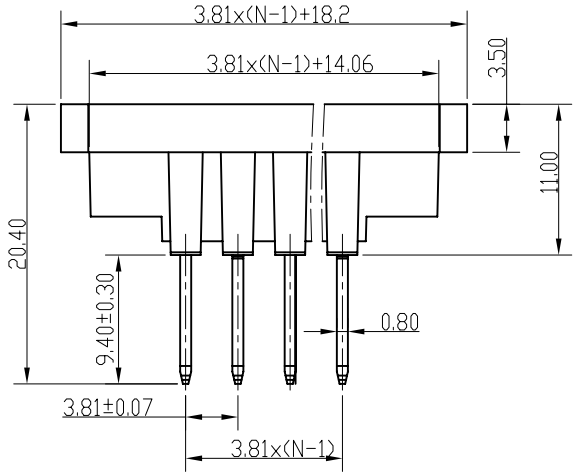

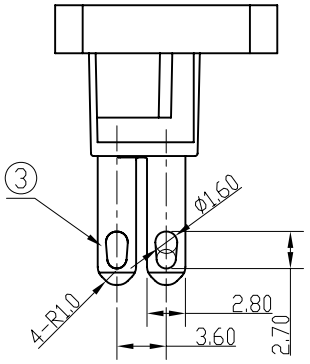

*注:最左边的槽偏上方;

*塑件2P、3P、4P没有筋.

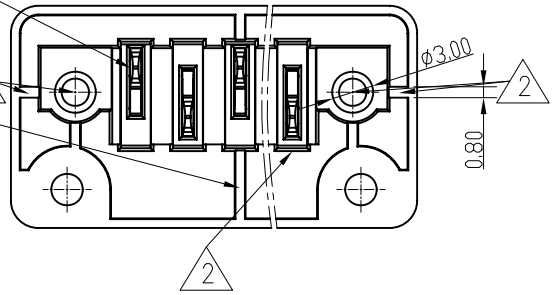

ITEM	NAME OF PART	NO. OF PART	Q"TY	MATERIAL	NOTES
3	15CDGV-PIN	1175B00010(H)	XX	phosphor bronze	Snce plated
2	2EDG CAP	S000000040(H)	2	BRASS	
1	15CDGV-3.81 Housing	1175A0YXXA(H)	1	PA66	UL94V-0

DETACHED LISTS

MM (INCH)

TOLERANCES EXCEPT AS NOTED

MM	
.0 ±	±
.00 ±	±
.000 ±	±

ANGLES ± 1°

THIRD ANGLE PROJECTION

DFTD Zhuwm	DATE 05/27/08"	
CHKD	DATE	
MFD	DATE	
APPVL	DATE	
MATERIAL :		
G.E :		
FINISH:		
SCALE :		

DEGSON®

宁波高正电子有限公司
DEGSON ELECTRONICS CO., LTD

NAME
15CDGV-3.81-XXP-1Y-00A(H)

DRAWING NO. 15CDGV-3.81-E01
/PART NO.

SIZE A3 | REV T2 08/24/10

DO NOT SCALE DRAWING

SHEET 1 OF 1