8.Contour Drawing &Block Diagram

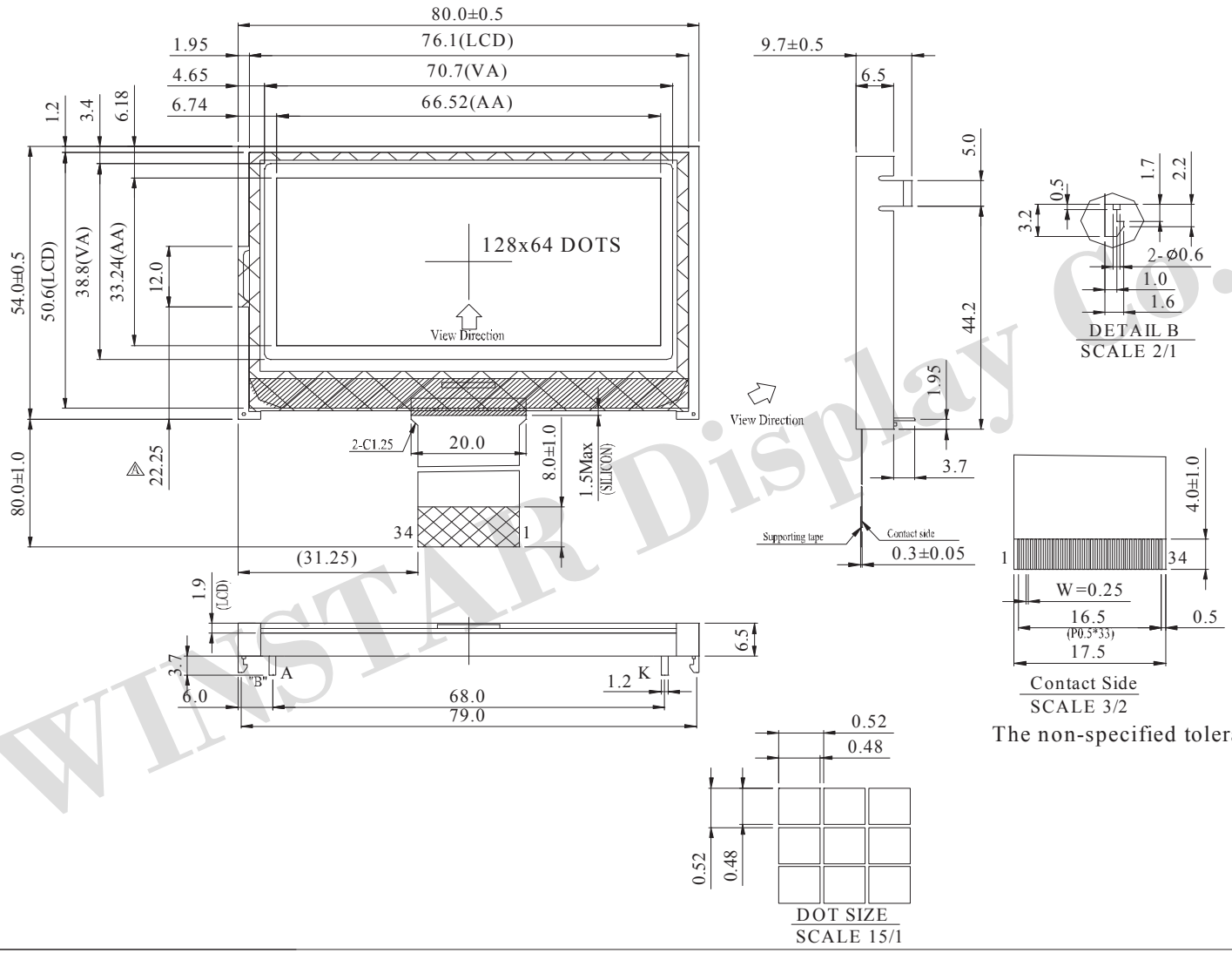

The non-specified tolerance of dimension is ±0.3mm.

PIN NO.	SIGNAL	PIN NO.	SIGNAL
1	$\overline{CS1}$	18	CAP3+
2	$\overline{RES}$	19	CAP1-
3	A0	20	CAP1+
4	$\overline{WR}$ (R/W)	21	CAP2+
5	$\overline{RD}$ (E)	22	CAP2-
6	D0	23	CAP4+
7	D1	24	VRS
8	D2	25	V4
9	D3	26	V3
10	D4	27	V2
11	D5	28	V1
12	D6	29	V0
13	D7	30	VR
14	V_{DD}	31	C86
15	Vss	32	P/S
16	V_{OUT}	33	$\overline{HPM}$
17	CAP5+	34	IRS

WINSTAR Display Co., Ltd.